ABANDONED MINE DRAINAGE REMEDIATION PROJECT
FOR THE
MARY D BOREHOLE
LOCATED IN
SCHUYLKILL TOWNSHIP, SCHUYLKILL COUNTY, PA

ACT 187 UNDERGROUND UTILITY PROTECTION ACT

RETTEW ASSOCIATES, INC. HEREBY STATES THAT, PURSUANT TO THE PROVISIONS OF ACT NO. 287 OF 1974, AS AMENDED BY ACT 187 OF 1996, OF THE PENNSYLVANIA LEGISLATURE, IT HAS PERFORMED THE FOLLOWING IN PREPARING THESE DRAWINGS REQUIRING EXCAVATION OR DEMOLITION WORK AT SITES WITHIN THE POLITICAL SUBDIVISION(S) SHOWN ON THE DRAWINGS:

1. PURSUANT TO SECTION 4, CLAUSE (2) OF SAID ACT, RETTEW ASSOCIATES, INC. REQUESTED FROM EACH USER'S OFFICE DESIGNATED ON SUCH LIST PROVIDED BY THE ONE CALL SYSTEM NOTIFICATION, THE INFORMATION PRESCRIBED BY SECTION 2, CLAUSE (4) OF SAID ACT, NOT LESS THAN (10) NOR MORE THAN (90) WORKING DAYS BEFORE FINAL DESIGN IS TO BE COMPLETED.
2. PURSUANT TO SECTION 4, CLAUSE (5) OF SAID ACT, RETTEW ASSOCIATES, INC. HAS MET THEIR OBLIGATIONS OF CLAUSE (2) BY CALLING THE ONE CALL SYSTEM SERVING THE LOCATION WHERE EXCAVATION IS TO BE PERFORMED.
3. PURSUANT TO SECTION 4, CLAUSE (3) OF SAID ACT, RETTEW ASSOCIATES, INC. HAS SHOWN UPON THESE DRAWINGS "THE POSITION AND TYPE OF EACH LINE, AS DERIVED PURSUANT TO THE REQUEST MADE AS REQUIRED BY CLAUSE (2), THE SERIAL NUMBER PROVIDED BY THE ONE CALL SYSTEM, THE TOLL-FREE ONE CALL SYSTEM PHONE NUMBER, AND THE NAME OF THE USER, THE USER'S DESIGNATED OFFICE ADDRESS AND PHONE NUMBER AS SHOWN ON THE LIST REFERRED TO IN SECTION 4, CLAUSE (5) OF SAID ACT."

AND RETTEW ASSOCIATES, INC DOES NOT MAKE ANY REPRESENTATION, WARRANTY, ASSURANCE OR GUARANTEE THAT THE INFORMATION RECEIVED PURSUANT TO SAID REQUEST AND AS REFLECTED ON THESE DRAWINGS IS CORRECT OR ACCURATE, BUT RETTEW ASSOCIATES, INC. IS REFLECTING SAID INFORMATION ON THESE DRAWINGS ONLY DUE TO THE REQUIREMENTS OF THE SAID ACT NO. 187 OF DECEMBER 19, 1996.

ONE CALL SYSTEM SERIAL NO. NOTIFICATION BY RETTEW ASSOCIATES, INC.
DATE: 06/27/2011

ONE CALL SYSTEM SERIAL NUMBER: 20111782788

PA 1 SYSTEM, INC.
1-800-242-1776

CALL BEFORE YOU DIG!
PENNSYLVANIA LAW REQUIRES (3) WORKING DAYS NOTICE FOR CONSTRUCTION PHASE AND (10) WORKING DAYS IN DESIGN STAGE - STOP CALL

UTILITIES RESPONDED:

BLYTHE TOWNSHIP MUNICIPAL AUTHORITY
375 VALLEY STREET
NEW PHILADELPHIA, PA 17959-1218
CONTACT: MICHAEL E BURDA

FRONTIER COMM. OF LAKEWOOD INC.
4 S APPLE ST
BARNESVILLE, PA 18214
CONTACT: CHARLES HUBIAK
E-MAIL: charles_hubiak@frontiercorp.com

METROCAST COMMUNICATIONS
911 N MARKET ST
BERWICK, PA 18603
CONTACT: CINDY REIGEL

PPL ELECTRIC UTILITIES CORPORATION
4810 LYCOMING MALL DR
MONTOURSVILLE, PA 17754
CONTACT: PAMELA SEITZER
E-MAIL: pdseitzer@pplweb.com

SCHUYLKILL VALLEY SEWER AUTHORITY
318 RIDGE RD
PO BOX 53
CUMBOLA, PA 17930
CONTACT: DAN LUBINSKY
E-MAIL: suzannesapansavage@verizon.net

SUNOCO PIPELINE LP
525 FRITZTOWN RD
SINKING SPRING, PA 19608
CONTACT: ONE CALL DEPARTMENT

VERIZON NORTH
2201 EAST 30TH STREET
ERIE, PA 16510
CONTACT: MICHAEL A GEARY
EMAIL: michael.geary@verizon.com

VERIZON PENNSYLVANIA INC
15 E MONTGOMERY AVE
PITTSBURGH, PA 15212
CONTACT: OFFICE PERSONNEL

VERIZON PENNSYLVANIA INC
901 TATNALL STREET 2ND FLOOR
WILMINGTON, DE 19801
CONTACT: OFFICE PERSONNEL

SHEET INDEX

SHT. 1	COVER
SHT. 2	EXISTING PLAN
SHT. 3	PROPOSED PLAN
SHT. 4	PROPOSED INTAKE PLAN AND PROFILE
SHT. 5	E & S PLAN
SHT. 6	E & S PLAN
SHT. 7	TREATMENT CELL PLAN & PROFILE
SHT. 8	DETAILS
SHT. 9	DETAILS
SHT. 10	DETAILS
SHT. 11	E & S NOTES
SHT. 12	E & S DETAILS
SHT. 13	E & S DETAILS

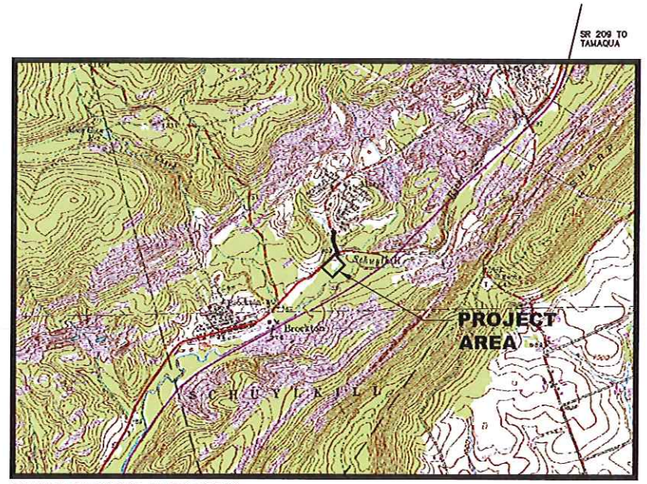

DELANO & ORWIGSBURG, PA USGS QUADS

LOCATION MAP
APPROXIMATE SCALE: 1"=2000'

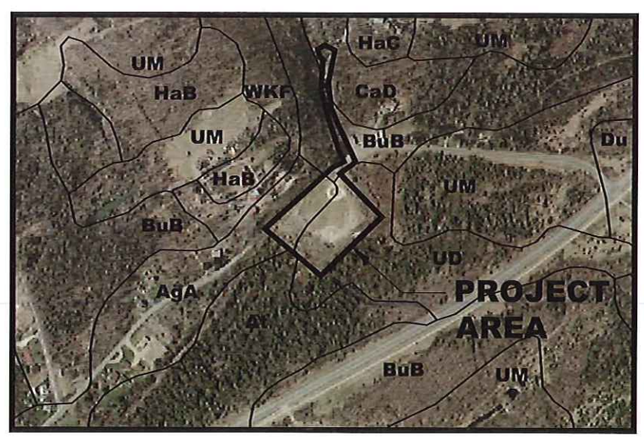

SOILS MAP
APPROXIMATE SCALE: 1"=400'

GENERAL NOTES

1. BENCHMARK- MAG NAIL SET 2' ABOVE GROUND LEVEL ON PPL UTILITY POLE 46868-55201 LOCATED WEST OF THE ACCESS DRIVE. 522173.93 NORTHING 2437507.84 EASTING ELEVATION 796.92
2. ALL EXISTING UTILITIES HAVE BEEN SHOWN IN ACCORDANCE WITH THE BEST AVAILABLE INFORMATION.
3. THE CONTRACTOR SHALL DETERMINE THE EXACT LOCATION OF ALL ABOVE GROUND AND BELOW GROUND UTILITIES AND STRUCTURES AND WILL BE RESPONSIBLE FOR THE PROTECTION OF THESE UTILITIES AND STRUCTURES AT ALL TIMES.
4. THE CONTRACTOR SHALL TAKE ALL NECESSARY PRECAUTIONS TO PROTECT THE EXISTING UTILITIES AND MAINTAIN UNINTERRUPTED SERVICE AND ANY DAMAGE SHALL BE REPAIRED IMMEDIATELY AND COMPLETELY AT HIS EXPENSE.
5. THE PLAN LOCATIONS AND DIMENSIONS SHALL BE STRICTLY ADHERED TO UNLESS OTHERWISE DIRECTED BY THE ENGINEER. PLAN CHANGES, SHOULD THEY BE REQUIRED, ARE SUBJECT TO MUNICIPAL AND COUNTY ORDINANCES.
6. CONTRACTOR SHALL BE RESPONSIBLE FOR MAINTAINING A COPY OF ALL PERMITS RELATED TO THE CONSTRUCTION SHOWN ON THESE PLANS ON THE JOB SITE AT ALL TIMES.
7. THE CONTRACTOR SHALL VERIFY ALL DIMENSIONS ON THE PROJECT SITE PRIOR TO THE START OF CONSTRUCTION.
8. CONTRACTOR SHALL NOTIFY ALL UTILITIES REQUIRED PER ACT 187 FOR VERIFICATION AND LOCATION OF UTILITIES PRIOR TO CONSTRUCTION.
9. THE CONTRACTOR SHALL BE RESPONSIBLE FOR ALL JOB SITE SAFETY, ALL TRAFFIC CONTROL, TRENCH BARRICADING, COVERING, SHEETING AND SHORING.
10. ALL BERMS AND IMPOUNDMENTS SHALL BE CONSTRUCTED IN 6" LIFTS AND COMPACTED TO 95% PROCTOR DENSITY.
11. THE CONTRACTOR SHALL BE RESPONSIBLE FOR COORDINATING ACCESS TO THE SITE WITH THE LANDOWNERS.
12. THE LIMESTONE AGGREGATE SHALL CONTAIN NOT LESS THAN NINETY PERCENT (90%) CALCIUM CARBONATE CONTENT, NOT MORE THAN FIVE PERCENT (5%) MAGNESIUM OXIDE (MgO), AND NOT MORE THAN FIVE PERCENT (5%) IRON OXIDE(Fe_2O_3). A SAMPLE OF THE LIMESTONE MUST BE TESTED BY A THIRD PARTY LABORATORY AND THE RESULTS MUST BE SUBMITTED FOR REVIEW PRIOR TO PLACEMENT OF ANY LIMESTONE.
13. ALL LIMESTONE AND NON-CALCAREOUS AGGREGATE UTILIZED ON SITE SHALL MEET SPECIFICATION SET FORTH IN PENNDOT PUBLICATION 408/2003. CERTIFICATION WILL BE REQUIRED FOR QUALITY AND CLASSIFICATION OF ALL AGGREGATE UTILIZED.
14. THE CONTRACTOR SHALL BE RESPONSIBLE FOR THE REMOVAL AND DISPOSAL FOR ALL UNUTILIZED MATERIAL ON THE SITE.
15. ALL CLAY MATERIAL SHALL BE COMPACTED TO ELIMINATE SEEPAGE.
16. MATERIAL FOR CONSTRUCTION OF BERMS SHALL BE CLEAN FILL FREE OF ORGANIC MATERIAL AND STONES IN EXCESS OF 6" IN DIAMETER.
17. TRACKED EQUIPMENT SHALL BE ALLOWED ONSITE. IT IS THE CONTRACTOR'S RESPONSIBILITY TO REPAIR ANY DAMAGE CAUSED BY SUCH EQUIPMENT.
18. THE CONTRACTOR SHALL BE RESPONSIBLE FOR NOTIFYING RETTEW ASSOCIATES, INC., AND THE SCHUYLKILL HEADWATERS ASSOCIATION TEN (10) WORKING DAYS PRIOR TO THE START OF CONSTRUCTION.
19. 18" SILT FENCE AND 12" FILTER SOXX AS DETAILED ON SHEET 12 MAY BE USED INTERCHANGABLY.

NO.	DATE	REVISION
3	9/14/12	CHANGE ORDER #1 SCOPE REDUCTION
2	6/25/12	MINOR REVISIONS FOR BIDDING
1	9/27/11	REVISED PER SCD COMMENTS DATED 9/7/11

FOR RETTEW ASSOCIATES BY:
COMMONWEALTH OF PENNSYLVANIA REGISTERED PROFESSIONAL CHRISTINE HALDEMAN

MANAGER: CHARLES MYERS, P.E.
DESIGN BY: CHKD BY: CH
SURV. CHIEF: R. ORNER
FIELDBOOK NO. DATA COLLECTOR
DRAWN BY: CHKD BY: CLM
DRAWING REFERENCE: Y:\08-04234-008\CAD\CT\CONF\08-04234-008-01 Cover.dwg
XREFS: 08-04234-008 TB 08-04234-008 CD Base

CLIENT
SCHUYLKILL HEADWATERS ASSOCIATION, INC.
P.O. BOX 1385
POTTSVILLE, PA 17901
PHONE: 570-385-2122

SCALE: AS NOTED

RETTEW
RETTEW Associates, Inc.
650 E. Main Street, Suite # 220
Schuylkill Haven, PA 17972
Phone: (570) 385-2217 Fax: (570) 385-2217
Email: rettew@rettew.com Website: www.rettew.com
Engineers • Planners • Surveyors • Landscape Architects
Environmental Consultants

ABANDONED MINE DRAINAGE REMEDIATION
FOR THE
MARY D BOREHOLE
COVER SHEET
SCHUYLKILL TOWNSHIP SCHUYLKILL COUNTY, PA

DATE: AUG. 11, 2011
SHEET NO. 1 OF 13
DWG. NO. 08-04234-008

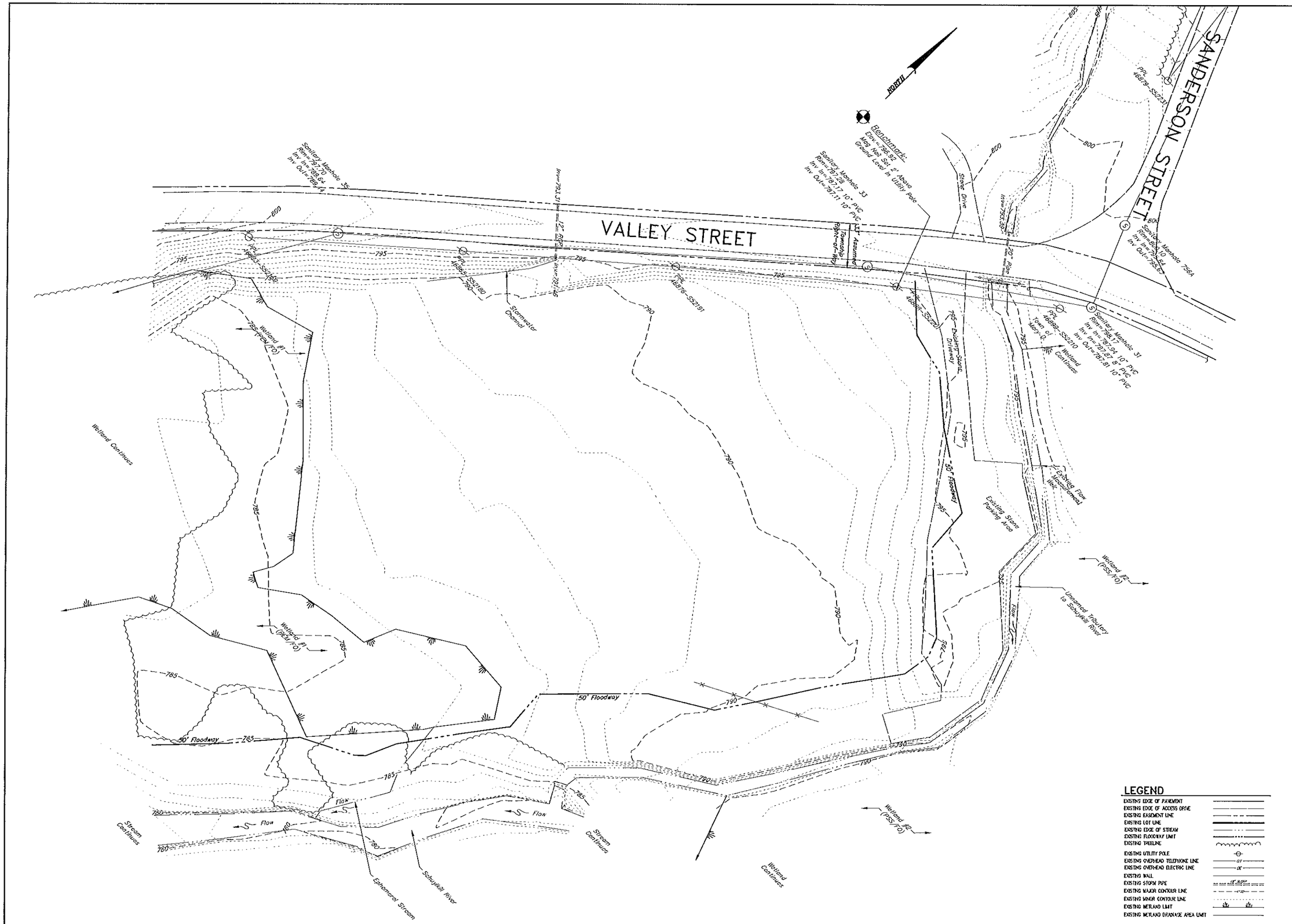

NO.	DATE	REVISION
3	9/14/12	CHANGE ORDER #1 SCOPE REDUCTION
2	6/29/12	MINOR REVISIONS FOR BIDDING
1	9/27/11	REVISED FOR SCD COMMENTS DATED 9/7/11

FOR RETTEW ASSOCIATES BY:

REGISTERED PROFESSIONAL ENGINEER CHRISTINE HAUSMAN PENNSYLVANIA

MANAGER: CHARLES MYERS, P.E.
DESIGN BY: CHKD BY: CH
SURV. CHIEF: R. CORNER
FIELDBOOK NO. DATA COLLECTOR
DRAWN BY: CHKD BY: CLM
DRAWING REFERENCE: N:\DRV\08-04234-005\CAD\CTS\DRW\08-04234-005-02 EXISTING.dwg

CLIENT
SCHUYLKILL HEADWATERS ASSOCIATION, INC.
P.O. BOX 1385
POTTSVILLE, PA 17901
PHONE: 570-385-2122

SCALE
0 15' 30' 1"=30' 60' 90'

RETTEW
RETTEW Associates, Inc.
650 E. Main Street, Suite # 220
Schuylkill Haven, PA 17972
Phone: (570) 385-2279 Fax: (570) 385-2217
Email: rettew@rettew.com Website: www.rettew.com
Engineers • Planners • Surveyors • Landscape Architects
Environmental Consultants

ABANDONED MINE DRAINAGE REMEDIATION FOR THE MARY D BOREHOLE

EXISTING SITE PLAN

SCHUYLKILL TOWNSHIP SCHUYLKILL COUNTY, PA

DATE: AUG. 11, 2011

SHEET NO. 2 OF 13

DWG. NO. 08-04234-008

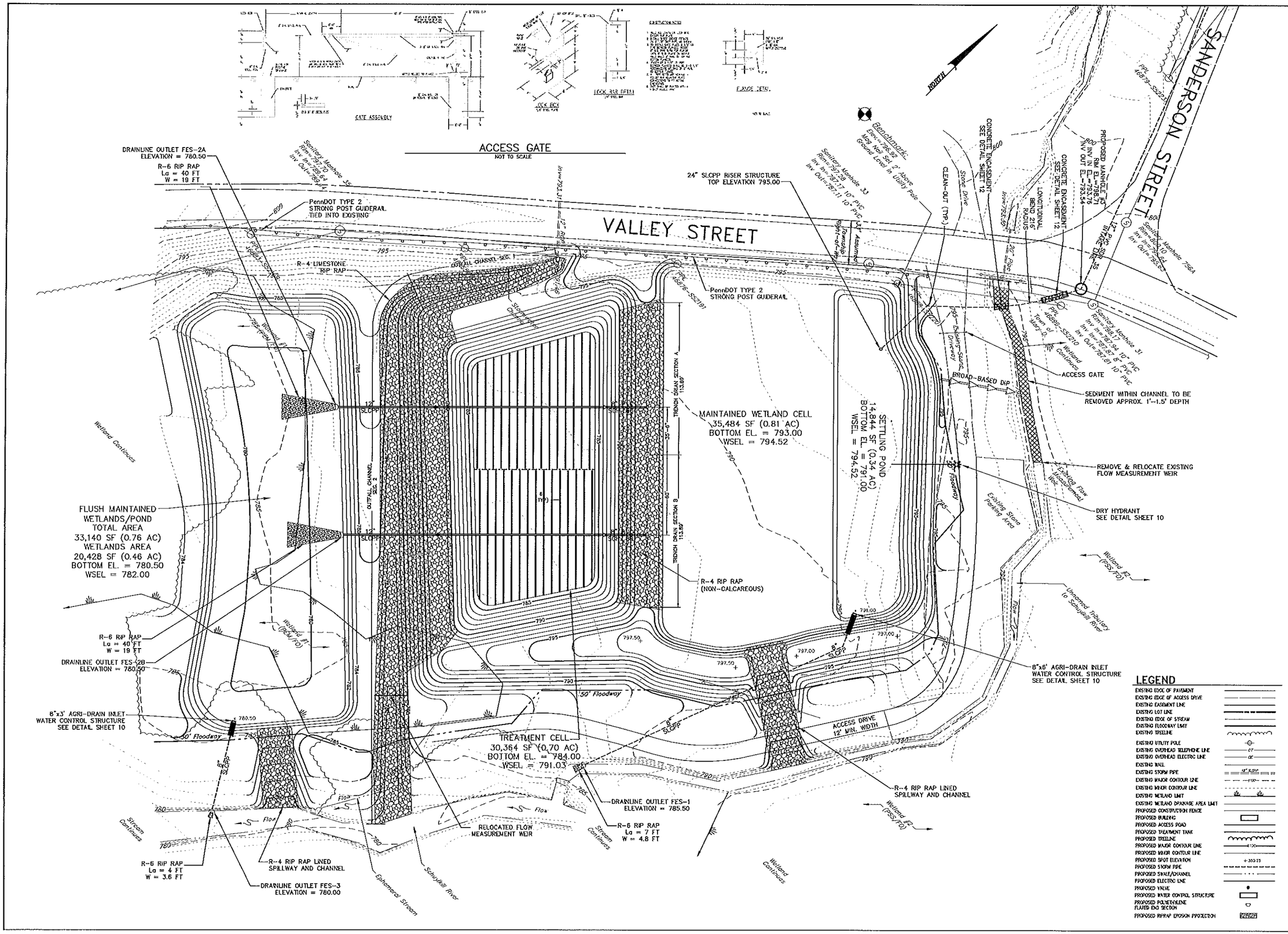
ACCESS GATE
NOT TO SCALE
GATE ASSEMBLY
LOCK BOX DETAIL
LOCK BOX DETAIL
FENCE DETAIL
NORTH
VALLEY STREET
SANDERSON STREET
DRAINLINE OUTLET FES-2A
ELEVATION = 780.50
R-6 RIP RAP
La = 40 FT
W = 19 FT
PennDOT TYPE 2
STRONG POST GUDERAIL
TIED INTO EXISTING
R-4 LIMESTONE
RIP RAP
24" SLOPP RISER STRUCTURE
TOP ELEVATION 795.00
PennDOT TYPE 2
STRONG POST GUDERAIL
Benchmark
Elev.=795.92
Nail Set 2' Above
Ground Level in Utility Pole
CONCRETE ENCASEMENT
SEE DETAIL SHEET 12
CLEAN-OUT (TYP.)
Stone Drive
PROPOSED MANHOLE #5
INV IN EL=793.71
INV OUT EL=793.54
LONGITUDINAL
BENDING
RADIUS
Sanitary Manhole 56A
Sanitary Manhole 31
Sanitary Manhole 33
Sanitary Manhole 35
Wetland Continues
ACCESS GATE
BROAD-BASED DIP
SEDIMENT WITHIN CHANNEL TO BE
REMOVED APPROX. 1'-1.5' DEPTH
MAINTAINED WETLAND CELL
35,484 SF (0.81 AC)
BOTTOM EL. = 793.00
WSEL = 794.52
SETTLING POND
14,844 SF (0.34 AC)
BOTTOM EL. = 791.00
WSEL = 794.52
REMOVE & RELOCATE EXISTING
FLOW MEASUREMENT WEIR
DRY HYDRANT
SEE DETAIL SHEET 10
Existing Flow Measurement Weir
Existing Stone Parking Area
Wetland #2 (PSS/FO)
Unnamed Tributary to Schuylkill River
FLUSH MAINTAINED
WETLANDS/POND
TOTAL AREA
33,140 SF (0.76 AC)
WETLANDS AREA
20,428 SF (0.46 AC)
BOTTOM EL. = 780.50
WSEL = 782.00
R-4 RIP RAP
(NON-CALCAREOUS)
Wetland #1 (PEM/FO)
R-6 RIP RAP
La = 40 FT
W = 19 FT
DRAINLINE OUTLET FES-2B
ELEVATION = 780.50
8"x3' AGRI-DRAIN INLET
WATER CONTROL STRUCTURE
SEE DETAIL SHEET 10
8"x6' AGRI-DRAIN INLET
WATER CONTROL STRUCTURE
SEE DETAIL SHEET 10
50' Floodway
TREATMENT CELL
30,364 SF (0.70 AC)
BOTTOM EL. = 784.00
WSEL = 791.03
ACCESS DRIVE
12' MIN. WIDTH
R-4 RIP RAP LINED
SPILLWAY AND CHANNEL
DRAINLINE OUTLET FES-1
ELEVATION = 785.50
R-6 RIP RAP
La = 7 FT
W = 4.8 FT
RELOCATED FLOW
MEASUREMENT WEIR
Stream Continues
Flow
R-6 RIP RAP
La = 4 FT
W = 3.6 FT
R-4 RIP RAP LINED
SPILLWAY AND CHANNEL
DRAINLINE OUTLET FES-3
ELEVATION = 780.00
Ephemeral Stream
Schuylkill River
Wetland Continues
LEGEND
EXISTING EDGE OF PAVEMENT
EXISTING EDGE OF ACCESS DRIVE
EXISTING EASEMENT LINE
EXISTING LOT LINE
EXISTING EDGE OF STREAM
EXISTING FLOODWAY LIMIT
EXISTING TREELINE
EXISTING UTILITY POLE
EXISTING OVERHEAD TELEPHONE LINE
EXISTING OVERHEAD ELECTRIC LINE
EXISTING WALL
EXISTING STORM PIPE
EXISTING MAJOR CONTOUR LINE
EXISTING MINOR CONTOUR LINE
EXISTING WETLAND LIMIT
EXISTING WETLAND DRAINAGE AREA LIMIT
PROPOSED CONSTRUCTION FENCE
PROPOSED BUILDING
PROPOSED ACCESS ROAD
PROPOSED TREATMENT TANK
PROPOSED TREELINE
PROPOSED MAJOR CONTOUR LINE
PROPOSED MINOR CONTOUR LINE
PROPOSED SPOT ELEVATION
PROPOSED STORM PIPE
PROPOSED SWALE/CHANNEL
PROPOSED ELECTRIC LINE
PROPOSED VALVE
PROPOSED WATER CONTROL STRUCTURE
PROPOSED POLYETHYLENE FLARED END SECTION
PROPOSED RIPRAP EROSION PROTECTION
NO. DATE REVISION
3 9/14/12 CHANGE ORDER #1 SCOPE REDUCTION
2 6/25/12 MINOR REVISIONS FOR BIDDING
1 9/27/11 REVISED PER SCD COMMENTS DATED 9/7/11
FOR REITEW ASSOCIATES BY:
CHRISTINE HAUSMAN
MANAGER: CHARLES MYERS, P.E.
DESIGN BY: CHKD BY: CH
SURV. CHIEF: R. ORNER
FIELDBOOK NO. DATA COLLECTOR
DRAWN BY: CHKD BY: CLM
DRAWING REFERENCE:
CLIENT
SCHUYLKILL HEADWATERS ASSOCIATION, INC.
P.O. BOX 1385
POTTSVILLE, PA 17901
PHONE: 570-385-2122
SCALE 1"=30'
REITEW
REITEW Associates, Inc.
650 E. Main Street, Suite # 220
Schuylkill Haven, PA 17972
Phone (570) 385-2270 - Fax (570) 385-2217
Email: reitew@reitewassociates Website: www.reitew.com
Engineers • Planners • Surveyors • Landscape Architects
Environmental Consultants
ABANDONED MINE DRAINAGE REMEDIATION
FOR THE
MARY D BOREHOLE
PROPOSED SITE PLAN
SCHUYLKILL TOWNSHIP
SCHUYLKILL COUNTY, PA
DATE: AUG. 11, 2011
SHEET NO. 3 OF 13
DWG. NO. 08-04234-008

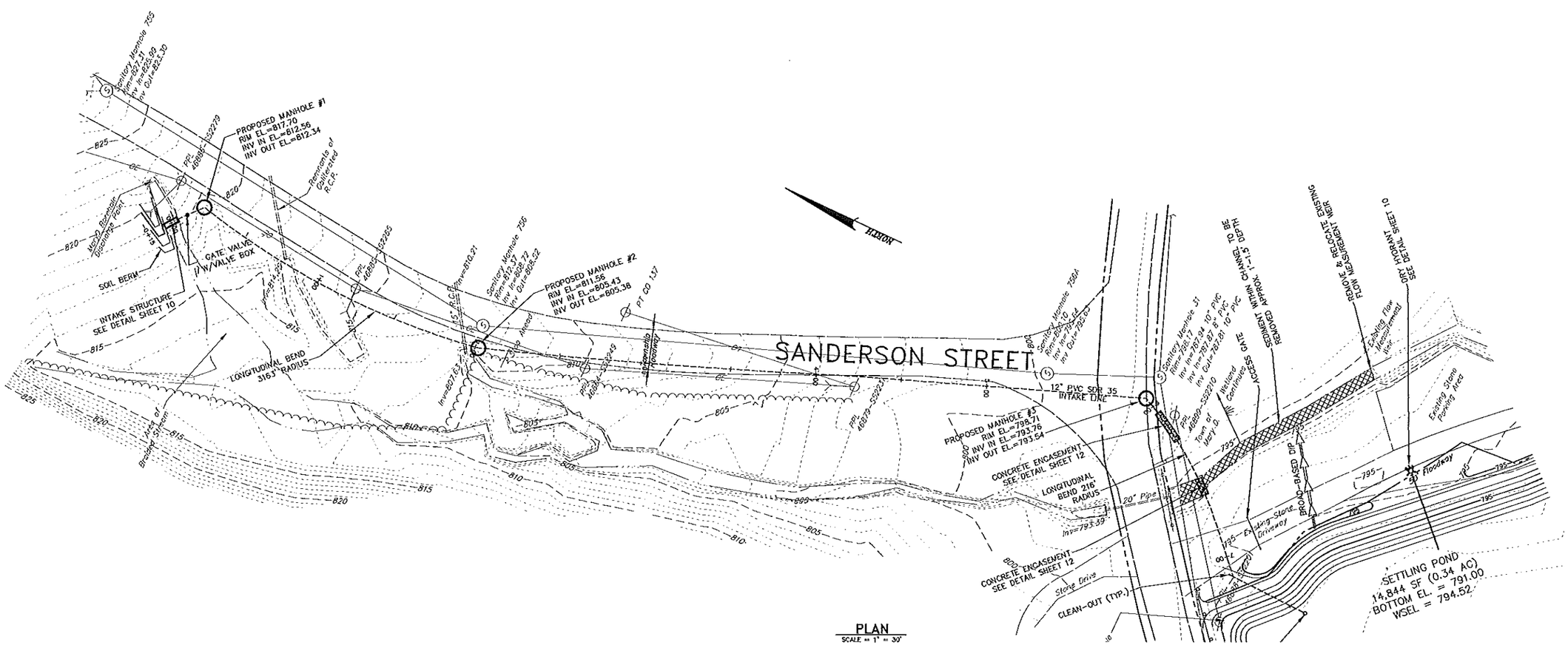

PLAN

SCALE = 1" = 30'

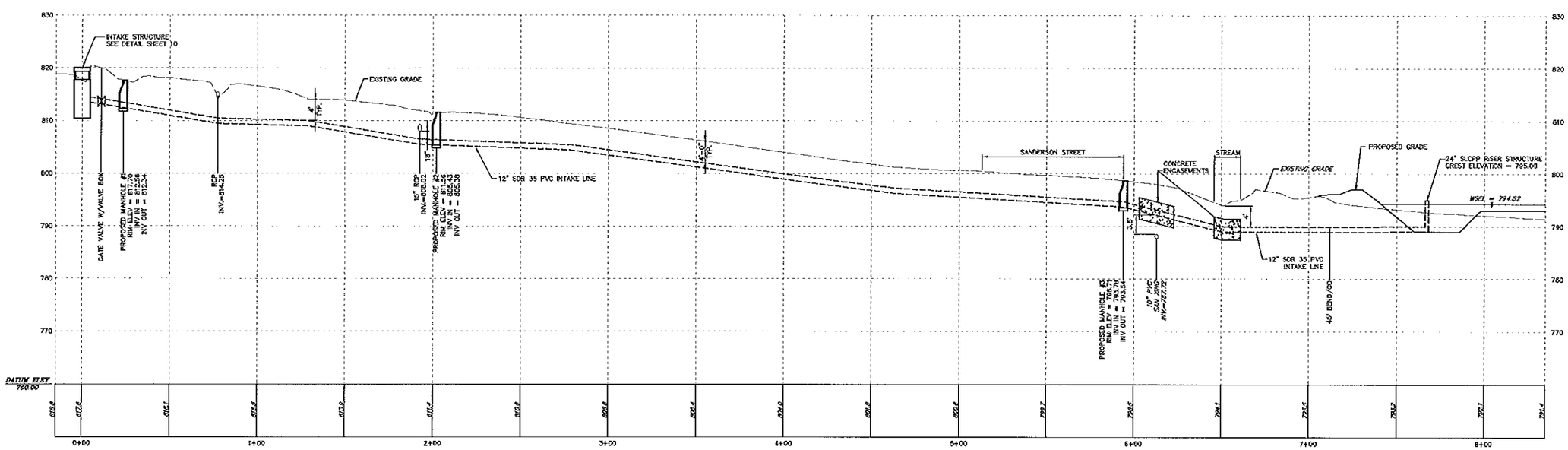

PROFILE

HORIZ. SCALE: 1"=30'
VERT. SCALE: 1"=10'

NO.	DATE	REVISION
3	9/14/12	CHANGE ORDER #1 SCOPE REDUCTION
2	6/25/12	MINOR REVISIONS FOR BIDDING
1	9/27/11	REVISED PER SCD COMMENTS DATED 9/7/11

FOR RETTEW ASSOCIATES BY:

CHRISTINE HALDEMAN

MANAGER: CHARLES MYERS, P.E.
DESIGN BY: CH
DRWN BY: CLM
SURV. CHIEF: R. ORNER
FIELDBOOK NO. DATA COLLECTOR
DRAWING REFERENCE: N:\08-04234-008\CAD\CAD\08-04234-008-01 Proposed Plan.dwg

CLIENT
SCHUYLKILL HEADWATERS ASSOCIATION, INC.
P.O. BOX 1385
POTTSVILLE, PA 17901
PHONE: 570-385-2122

SCALE 1"=30'

RETTEW
RETTEW Associates, Inc.
650 E. Main Street, Suite # 220
Schuylkill Haven, PA 17972
Phone (570) 385-2217 Fax (570) 385-2217
Email: rettew@rettew.com Website: www.rettew.com
Engineers • Planners • Surveyors • Landscape Architects
Environmental Consultants

ABANDONED MINE DRAINAGE REMEDIATION
FOR THE
MARY D BOREHOLE
PROPOSED PLAN AND PROFILE
SCHUYLKILL TOWNSHIP SCHUYLKILL COUNTY, PA

DATE: AUG. 11, 2011
SHEET NO. 4 OF 13
DWG. NO. 08-04234-008

SOILS CLASSIFICATIONS

AgA – ALVIRA SILT LOAM, 0 TO 3 PERCENT SLOPES
At – ATKINS SILT LOAM
BuB – BUCHANAN GRAVELLY LOAM, 3 TO 8 PERCENT SLOPES
CoD – CALVIN SHALY SILT LOAM, 15 TO 25 PERCENT SLOPES
UD – UDIFLUVENTS, COAL OVERWASH

SITE STABILIZATION

ANY DISTURBED AREA ON WHICH ACTIVITY HAS CEASED MUST BE STABILIZED IMMEDIATELY. DURING NON-GERMINATING PERIODS, MULCH MUST BE APPLIED AT THE RECOMMENDED RATES. DISTURBED AREAS WHICH ARE NOT AT FINISHED GRADE AND WHICH WILL BE RE-DISTURBED WITHIN ONE YEAR MAY BE STABILIZED IN ACCORDANCE WITH TEMPORARY SEEDING SPECIFICATIONS. DISTURBED AREAS, WHICH ARE EITHER AT FINISHED GRADE OR WILL NOT BE RE-DISTURBED WITHIN ONE YEAR, MUST BE STABILIZED IN ACCORDANCE WITH PERMANENT SEEDING SPECIFICATIONS.

STABILIZATION OF ALL AREAS PROTECTED BY INTERIM CONTROL MEASURES/FACILITIES SHALL BE TO THE PERMANENT STRUCTURAL CONDITION OR 70% UNIFORM PERENNIAL VEGETATION BEFORE THE INTERIM MEASURES/FACILITIES CAN BE REMOVED.

SOIL LIMITATIONS

SUMMARY OF RESTRICTIVE SOIL FEATURES

USE	SOIL TYPE				
	AgA	At	BuB	CoD	UD
SHALLOW EXCAVATIONS	SEVERE: WETNESS	SEVERE: FLOODS, WETNESS	SEVERE: WETNESS	SEVERE: SLOPE	NOT RATED
ROADFILL	POOR: FROST ACTION	POOR: WETNESS, FROST ACTION	FAIR: FROST ACTION, LOW STRENGTH	POOR: THIN LAYER	NOT RATED
GRAVEL	UNSUITED: EXCESS FINES	UNSUITED: EXCESS FINES	UNSUITED: EXCESS FINES	UNSUITED: EXCESS FINES	NOT RATED
TOPSOIL	FAIR: THIN LAYER	POOR: WETNESS	POOR: SMALL STONES	POOR: SMALL STONES, SLOPE	NOT RATED
POND RESERVOIR AREAS	SLOPE	SEEPAGE, WETNESS	SLOPE	DEPTH TO ROCK, SEEPAGE	NOT RATED
EMBANKMENTS, DIKES AND LEVEES	LOW STRENGTH, COMPRESSIBLE, PIPING	PIPING, FLOODS	PIPING, LOW STRENGTH	PIPING	NOT RATED

LIMITATIONS OF THESE SOILS CAN BE OVERCOME THROUGH THE USE OF SELECT AND/OR OFF-SITE MATERIAL WHERE NEEDED, DEWATERING DEVICES, SLOPE PROTECTION, CLAY DIKES AND ANTI-SEEP DEVICES IN BERMS, AND CONSTRUCTION TECHNIQUES.

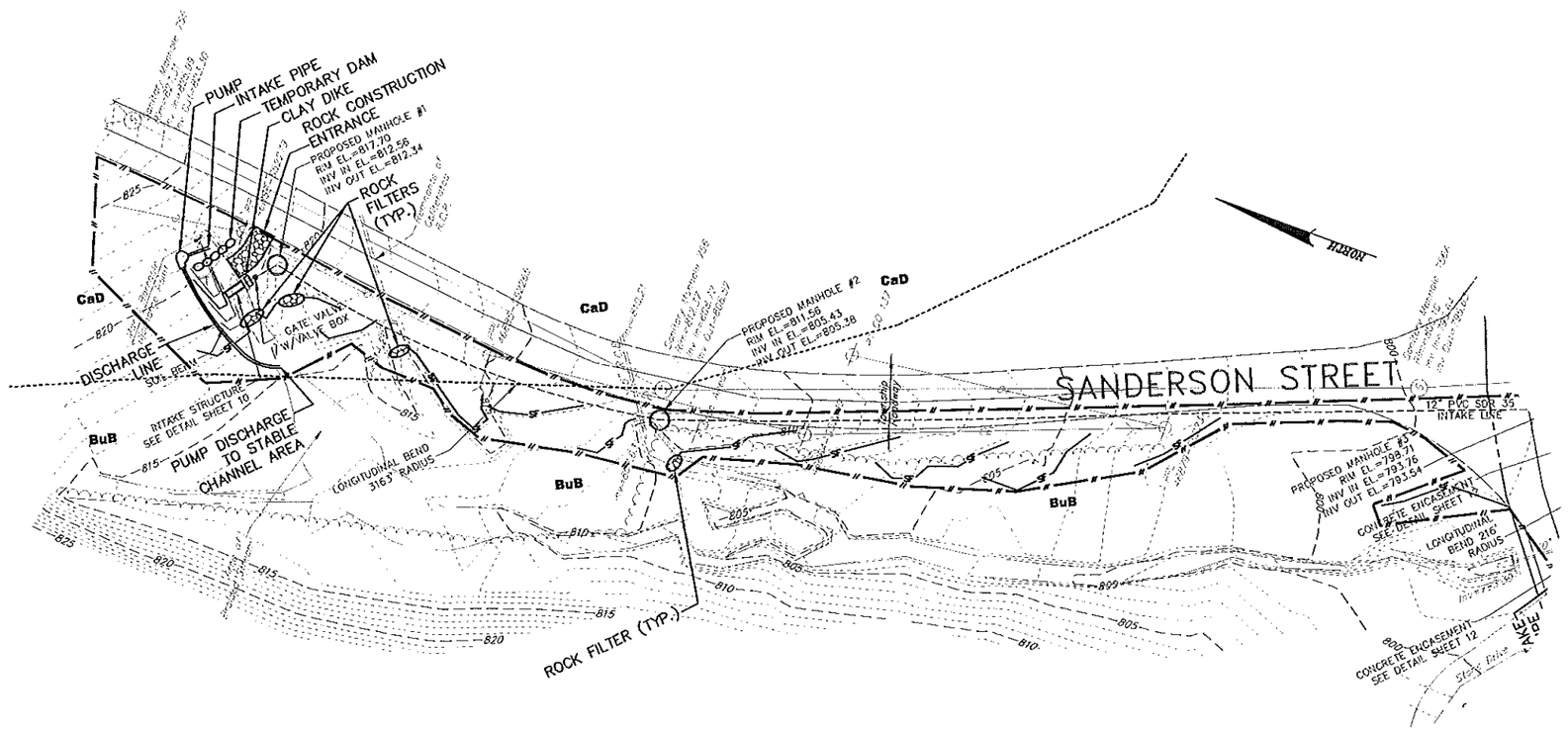

LEGEND

EXISTING EDGE OF PAVEMENT
EXISTING EDGE OF ACCESS DRIVE
EXISTING EASEMENT LINE
EXISTING LOT LINE
EXISTING EDGE OF STREAM
EXISTING FLOODWAY LIMIT
EXISTING TREELINE
EXISTING UTILITY POLE
EXISTING OVERHEAD TELEPHONE LINE
EXISTING OVERHEAD ELECTRIC LINE
EXISTING WALL
EXISTING STORM PIPE
EXISTING MAJOR CONTOUR LINE
EXISTING MINOR CONTOUR LINE
EXISTING WETLAND LIMIT
EXISTING WETLAND DRAINAGE AREA LIMIT
PROPOSED EASEMENT LINE
PROPOSED CONSTRUCTION FENCE
PROPOSED BUILDING
PROPOSED ACCESS ROAD
PROPOSED TREATMENT TANK
PROPOSED TREELINE
PROPOSED MAJOR CONTOUR LINE
PROPOSED MINOR CONTOUR LINE
PROPOSED SPOT ELEVATION
PROPOSED STORM PIPE
PROPOSED SWALE/CHANNEL
PROPOSED ELECTRIC LINE
PROPOSED VALVE
PROPOSED WATER CONTROL STRUCTURE
PROPOSED POLYETHYLENE FLARED END SECTION
PROPOSED RIPRAP EROSION PROTECTION
LIMITS OF DISTURBANCE
TEMPORARY 18" SILT FENCE OR 12" FILTER SOCK
FLAMED WATER FILTER BAG
EROSION CONTROL BLANKET
ROCK CONSTRUCTION ENTRANCE AND TEMPORARY ACCESS ROAD
SOIL TYPE BOUNDARY LINE

NO.	DATE	REVISION
3	9/14/12	CHANGE ORDER #1 SCOPE REDUCTION
2	6/25/12	MINOR REVISIONS FOR BIDDING
1	9/27/11	REVISED PER SCD COMMENTS DATED 9/7/11

FOR RETTEW ASSOCIATES BY:

CHRISTINE HALDEMAN
COMMONWEALTH OF PENNSYLVANIA
REGISTERED PROFESSIONAL

XREFS:
08-04234-base
08-04234-utilities
08-04234-topo
08-04234-ex-bndry
08-04234-ex-wetland
08-04234-ex-bldg
08-04234-ex-tree

MANAGER: CHARLES MYERS, P.E.
DESIGN BY: CHKD BY: CH
SURV. CHIEF: R. ORNER
FIELDBOOK NO. DATA COLLECTOR
DRAWN BY: CHKD BY: CLM
DRAWING REFERENCE: H:\08-04234-008\DATA\CTDWG\08-04234-008-05 Erc.dwg

CLIENT
SCHUYLKILL HEADWATERS ASSOCIATION, INC.
P.O. BOX 1385
POTTSVILLE, PA 17901
PHONE: 570-385-2122

SCALE
0 15' 30' 1"=30' 60' 90'

RETTEW
RETTEW Associates, Inc.
950 E. Main Street, Suite # 220
Schuylkill Haven, PA 17972
Phone (570) 385-2270 • Fax (570) 385-2217
Email: rettew@rettew.com Website: www.rettew.com
Engineers • Planners • Surveyors • Landscape Architects
Environmental Consultants

ABANDONED MINE DRAINAGE REMEDIATION FOR THE MARY D BOREHOLE

EROSION AND SEDIMENTATION CONTROL PLAN

SCHUYLKILL TOWNSHIP, SCHUYLKILL COUNTY, PA

DATE: AUG. 11, 2011

SHEET NO. 5 OF 13

DWG. NO. 08-04234-008

SOILS CLASSIFICATIONS

AgA – ALVIRA SILT LOAM, 0 TO 3 PERCENT SLOPES
At – ATKINS SILT LOAM
BuB – BUCHANAN GRAVELLY LOAM, 3 TO 8 PERCENT SLOPES
CoD – CALVIN SHALY SILT LOAM, 15 TO 25 PERCENT SLOPES
UD – UDIFLUVENTS, COAL OVERWASH

SITE STABILIZATION

ANY DISTURBED AREA ON WHICH ACTIVITY HAS CEASED MUST BE STABILIZED IMMEDIATELY. DURING NON-GERMINATING PERIODS, MULCH MUST BE APPLIED AT THE RECOMMENDED RATES. DISTURBED AREAS, WHICH ARE NOT AT FINISHED GRADE AND WHICH WILL BE RE-DISTURBED WITHIN ONE YEAR MAY BE STABILIZED IN ACCORDANCE WITH TEMPORARY SEEDING SPECIFICATIONS. DISTURBED AREAS, WHICH ARE EITHER AT FINISHED GRADE OR WILL NOT BE RE-DISTURBED WITHIN ONE YEAR, MUST BE STABILIZED IN ACCORDANCE WITH PERMANENT SEEDING SPECIFICATIONS.

STABILIZATION OF ALL AREAS PROTECTED BY INTERIM CONTROL MEASURES/ FACILITIES SHALL BE TO THE PERMANENT STRUCTURAL CONDITION OR 70% UNIFORM PERENNIAL VEGETATION BEFORE THE INTERIM MEASURES/FACILITIES CAN BE REMOVED.

SOIL LIMITATIONS

SUMMARY OF RESTRICTIVE SOIL FEATURES

USE	SOIL TYPE				
	AgA	At	BuB	CoD	UD
SHALLOW EXCAVATIONS	SEVERE: WETNESS	SEVERE: FLOODS, WETNESS	SEVERE: WETNESS	SEVERE: SLOPE	NOT RATED
ROADFILL	POOR: FROST ACTION	POOR: WETNESS, FROST ACTION	FAIR: FROST ACTION, LOW STRENGTH	POOR: THIN LAYER	NOT RATED
GRAVEL	UNSUITED: EXCESS FINES	UNSUITED: EXCESS FINES	UNSUITED: EXCESS FINES	UNSUITED: EXCESS FINES	NOT RATED
TOPSOIL	FAIR: THIN LAYER	POOR: WETNESS	POOR: SMALL STONES	POOR: SMALL STONES, SLOPE	NOT RATED
POND RESERVOIR AREAS	SLOPE	SEEPAGE, WETNESS	SLOPE	DEPTH TO ROCK, SEEPAGE	NOT RATED
EMBANKMENTS, DIKES AND LEVEES	LOW STRENGTH, COMPRESSIBLE, PIPING	PIPING, FLOODS	PIPING, LOW STRENGTH	PIPING	NOT RATED

LIMITATIONS OF THESE SOILS CAN BE OVERCOME THROUGH THE USE OF SELECT AND/OR OFF-SITE MATERIAL WHERE NEEDED, DEWATERING DEVICES, SLOPE PROTECTION, CLAY DIKES AND ANTI-SEEP DEVICES IN BERMS, AND CONSTRUCTION TECHNIQUES.

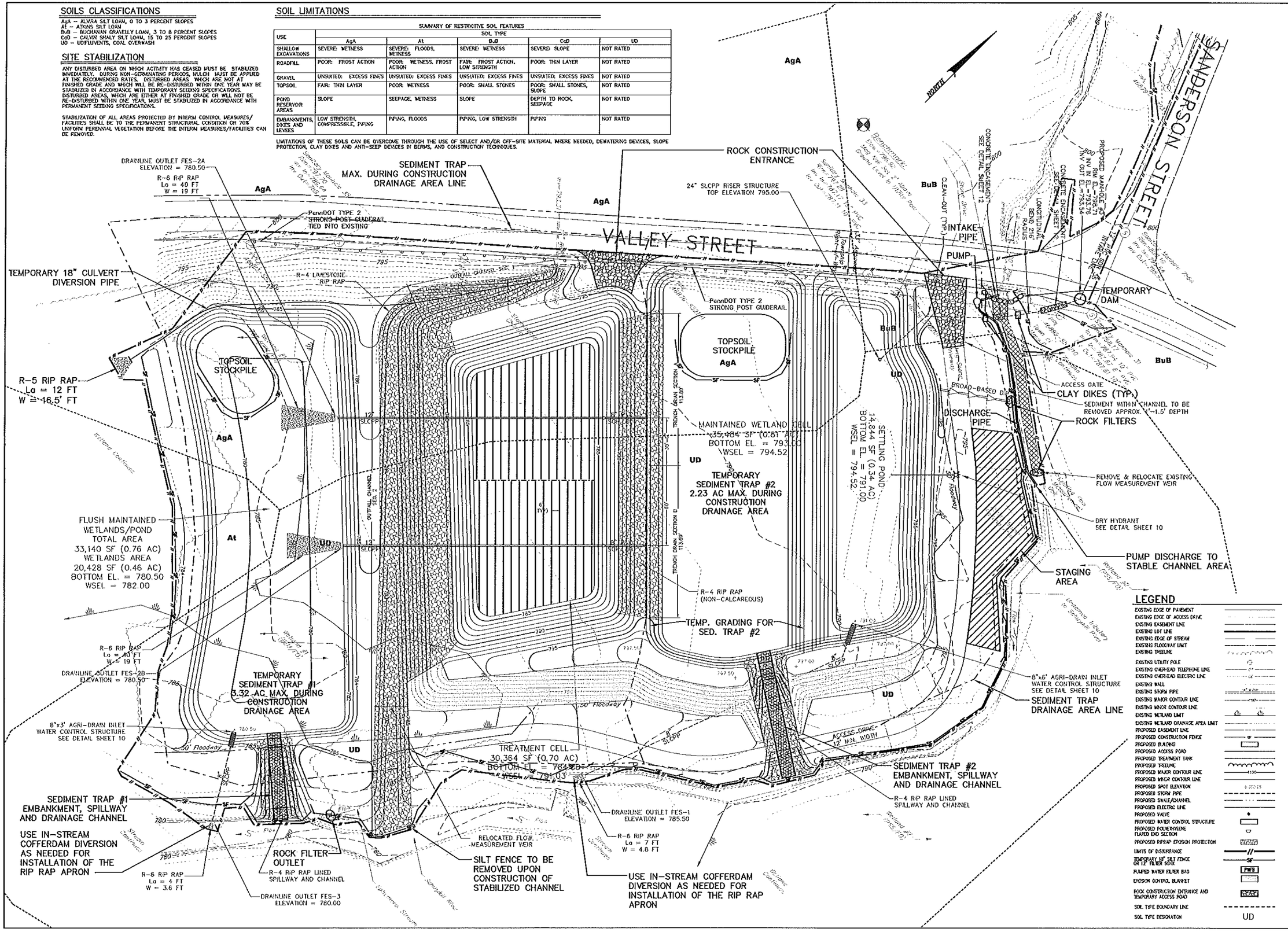

NO.	DATE	REVISION
3	9/14/12	CHANGE ORDER #1 SCOPE REDUCTION
2	6/25/12	MINOR REVISIONS FOR BIDDING
1	9/27/11	REVISED PER SCD COMMENTS DATED 9/7/11

FOR RETTEW ASSOCIATES BY:

CONSTINE HAUSMAN

MANAGER: CHARLES MYERS, P.E.
DESIGN BY: CHKD BY: CH
SURV. CHIEF: R. ORNER
FIELDBOOK NO. DATA COLLECTOR
DRAWN BY: CHKD BY: CLM
DRAWING REFERENCE: N:\SAVIN-04234-008\DESIGN\CLAY\Sm-04234-008-05 Sc4.dwg

CLIENT
SCHUYLKILL HEADWATERS ASSOCIATION, INC.
P.O. BOX 1385
POTTSVILLE, PA 17901
PHONE: 570-385-2122

SCALE 1"=30' 0 15' 30' 60' 90'

RETTEW
RETTEW Associates, Inc.
650 E. Main Street, Suite # 220
Schuylkill Haven, Pa. 17972
Phone (570) 385-2200 - Fax (570) 385-2217
Email: rettew@rettew.com Website: www.rettew.com
Engineers • Planners • Surveyors • Landscape Architects
Environmental Consultants

ABANDONED MINE DRAINAGE REMEDIATION FOR THE
MARY D BOREHOLE
EROSION AND SEDIMENTATION CONTROL PLAN
SCHUYLKILL TOWNSHIP SCHUYLKILL COUNTY, PA

DATE: AUG. 11, 2011
SHEET NO. 6 OF 13
DWG. NO. 08-04234-008

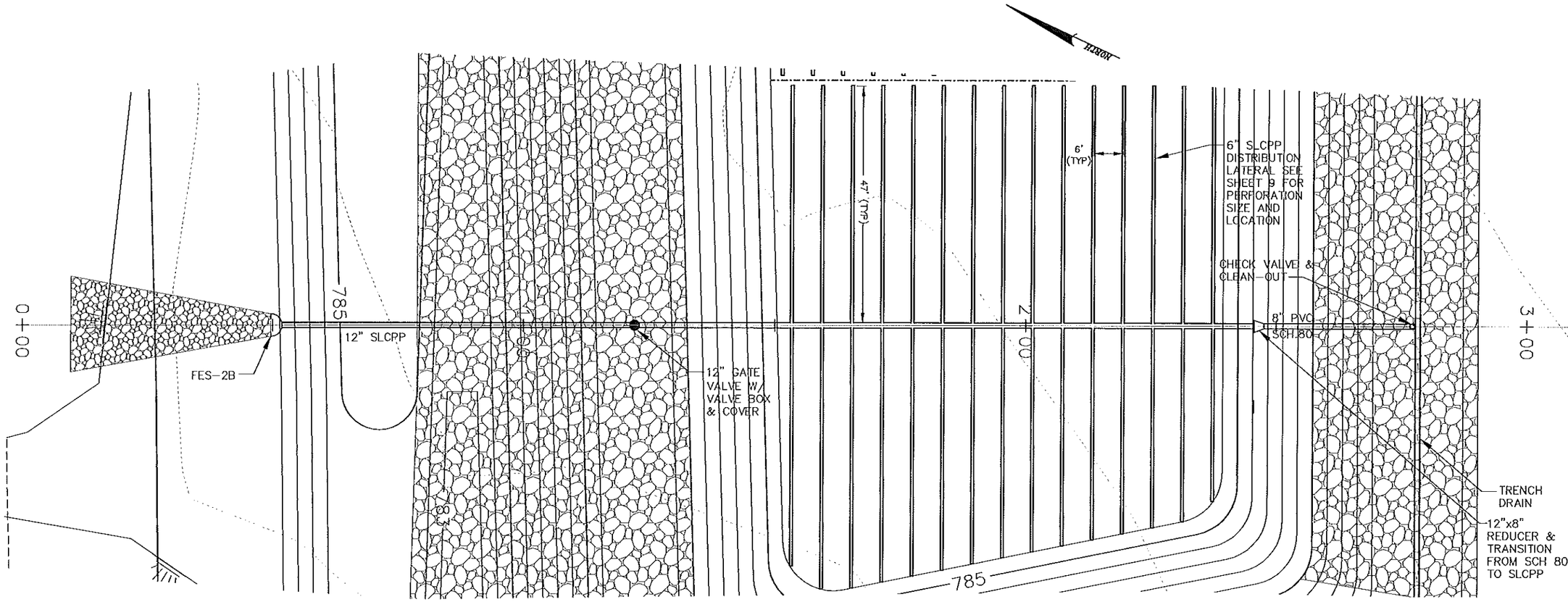

PLAN

SCALE = 1" = 10'

NOTE:
6" LATERALS MAY BE ATTACHED TO 12" MAIN BY 12"x12"x6"x6" CROSS FITTINGS. LATERALS MAY BE STAGGERED ON OPPOSITE SIDES OF MAIN AND ATTACHED USING 12"x12"x6" TEES, OR A MANUFACTURED SLCPP MANIFOLD MAY BE USED.

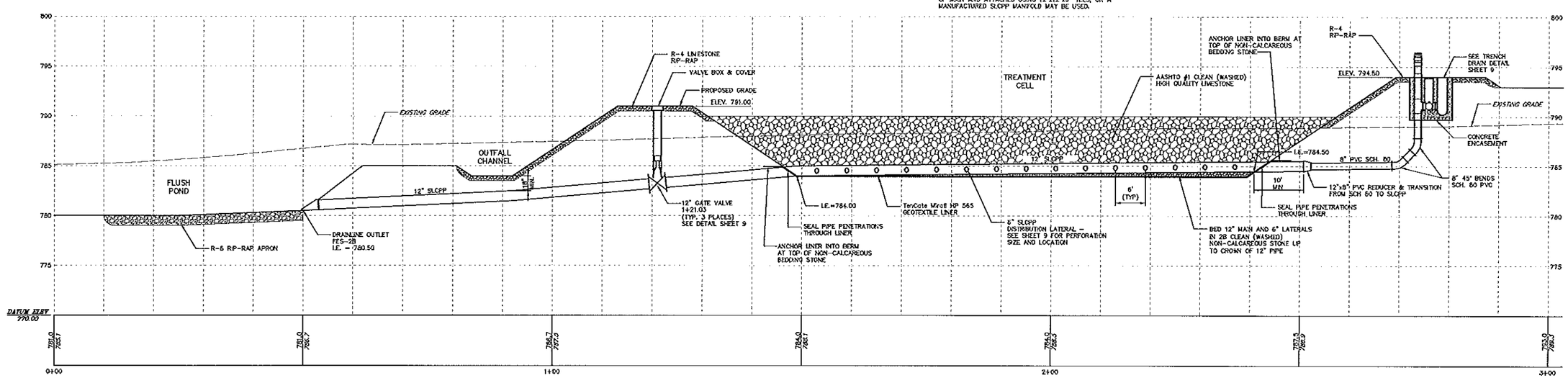

PROFILE

HORIZ. SCALE: 1"=10'
VERT. SCALE: 1"=5'

NO.	DATE	REVISION
3	9/14/12	CHANGE ORDER #1 SCOPE REDUCTION
2	6/25/12	MINOR REVISIONS FOR BIDDING
1	9/27/11	REVISED PER SCD COMMENTS DATED 9/7/11

FOR RETTEW ASSOCIATES BY:

CHRISTINE HALIDAY
REGISTERED PROFESSIONAL ENGINEER
COMMONWEALTH OF PENNSYLVANIA

MANAGER: CHARLES MYERS, P.E.
DESIGN BY: CHKD BY: CH
SURV. CHIEF: R. CORNER
FIELDBOOK NO. DATA COLLECTOR
DRAWN BY: CHKD BY: CLM
DRAWING REFERENCES: R:\08\08-04234-005\CAD\ECS\CGP\08-04234-008-07 Proposed Treatment Trench.dwg

CLIENT
SCHUYLKILL HEADWATERS ASSOCIATION, INC.
P.O. BOX 1385
POTTSVILLE, PA 17901
PHONE: 570-385-2122

SCALE 1"=10' (0, 5', 10', 20', 30')

RETTEW
RETTEW Associates, Inc.
050 E. Main Street, Suite # 220
Schuylkill Haven, Pa. 17972
Phone: (570) 385-2177 Fax: (570) 385-2217
Email: rettew@rettew.com Website: www.rettew.com
Engineers • Planners • Surveyors • Landscape Architects
Environmental Consultants

ABANDONED MINE DRAINAGE REMEDIATION
FOR THE
MARY D BOREHOLE
PROPOSED TREATMENT CELL
PLAN AND PROFILE DETAIL
SCHUYLKILL TOWNSHIP
SCHUYLKILL COUNTY, PA

DATE: AUG. 11, 2011
SHEET NO. 7 OF 13
DWG. NO. 08-04234-008

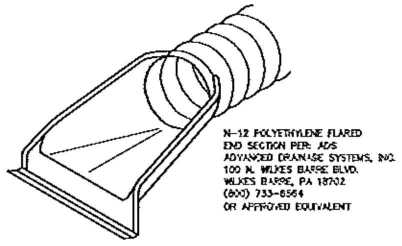

POLYETHYLENE FLARED END SECTION (FES)

NOT TO SCALE

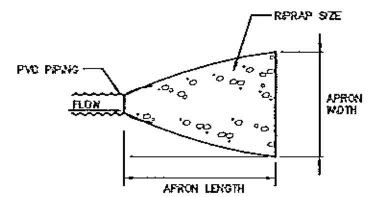

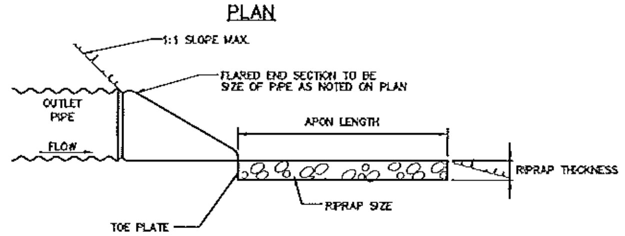

OUTLET	PIPE DIA.	TAILWATER CONDITION	MAX FLOW	MAX VELOCITY	APRON LENGTH	APRON WIDTH	RIPRAP SIZE	RIPRAP THICKNESS
FES-1	8"	MAX	3.87	11.08	7'	4.8'	R-6	30"
FES-2 A & B	12"	MAX	13.89	17.69	40'	19'	R-6 *	30"
FES-3	8"	MAX	2.46	7.04	4'	3.6'	R-4	18"

NOTES:

1. MERGE END SECTION INTO RIPRAPPED SPILLWAYS WHERE REQUIRED.

2. SHOULD REQUIRED SPILLWAY RIPRAP SIZE EXCEED REQUIRED OUTLET PROTECTION RIPRAP USE THE REQUIRED SPILLWAY RIPRAP.

* ALL TREATMENT CELL PIPES DISCHARGE TO THE FLUSHING POND WHICH IS DESIGNED TO SETTLE THE IRON SEDIMENT AND WILL SERVE AS A STILLING POND FOR THESE HIGH VELOCITY DISCHARGES.

FLARED END SECTION OUTLET PROTECTION

NOT TO SCALE

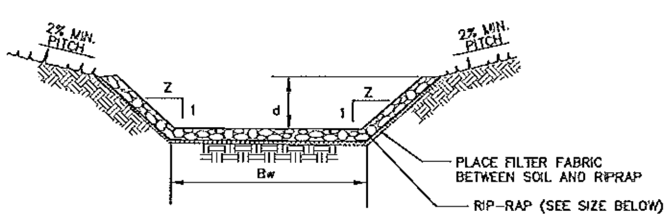

CHANNEL	Bw	d	Z	MIN. SLOPE	MAX. SLOPE	EROSION PROTECTION
WETLAND CELL EMERGENCY SPILLWAY	20'	1'	3	9.87%	9.87%	R-4 RIPRAP, 18" THICK
OUTFALL CHANNEL SEG. #1	3'	3'	2	5.68%	5.68%	R-4 LIMESTONE RIPRAP, 18" THICK
OUTFALL CHANNEL SEG. #2	6'	2'	3	1.00%	1.00%	R-4 LIMESTONE RIPRAP, 18" THICK
FLUSH POND EMERGENCY SPILLWAY	20'	1'	3	8.00%	8.00%	R-4 RIPRAP, 18" THICK

RIP-RAP CHANNEL DETAIL

NOT TO SCALE

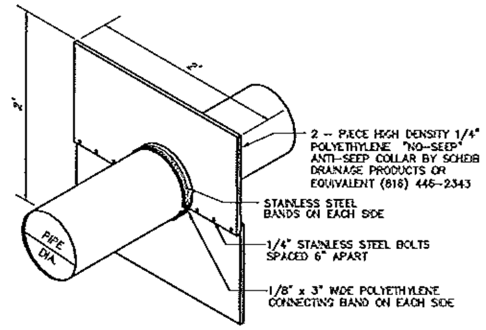

OUTLET	NUMBER OF COLLARS REQUIRED	DISTANCE FROM UPSTREAM END OF PIPE TO 1ST COLLAR	DISTANCE BETWEEN COLLARS
SETTLING POND DRAINPIPE	2	8'	22'
WETLAND CELL DRAINPIPE	1	6'	N/A
TREATMENT CELL DRAINPIPES (2)	3	12'	17'
FLUSHING POND DRAINPIPE	1	8'	N/A

NOTES:

1. SEE BASIN EMBANKMENT DETAIL FOR LOCATION WITHIN BERM.
2. APPLY MASTIC TO CONNECTING BANDS AND SET IN PLACE. BOLT HALVES TOGETHER & INSTALL METAL BANDS ON SPLIT HALVES OF COLLAR. TIGHTEN BOLTS AND BANDS. APPLY MASTIC AS NEEDED TO INSURE GOOD SEAL. BACKFILL AND HAND TAMP.

ANTI-SEEP COLLAR–POLYETHYLENE

NOT TO SCALE

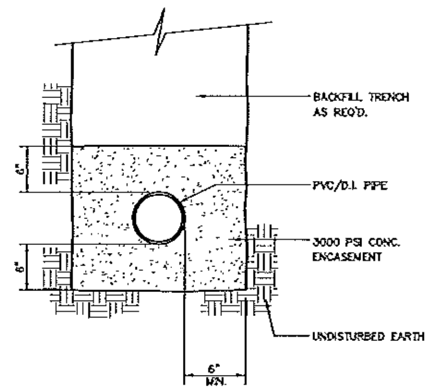

CONCRETE ENCASEMENT DETAIL

NOT TO SCALE

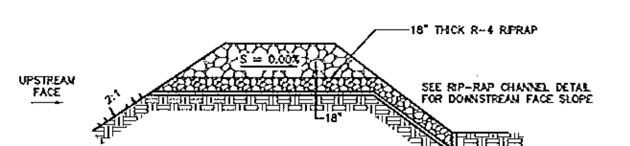

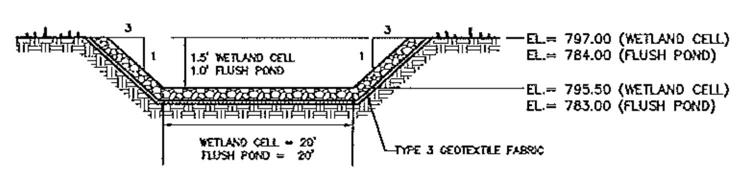

EMERGENCY SPILLWAY

NOT TO SCALE

OUTLET	APRON LENGTH	APRON WIDTH	RIPRAP SIZE	RIPRAP THICKNESS
WETLAND CELL	20'	15'	R-4	18"
FLUSH POND	20'	15'	R-4	18"

NOTE

CLAY DIKE SHALL CONSIST OF CLAY CONTAINING NO MORE THAN 15% (BY VOLUME) STONE NO LARGER THAN TWO (2) INCHES IN DIAMETER. CLAY SHALL BE PLACED IN SIX (6) INCH LIFTS AND COMPACTED BY A MECHANICAL TAMPER TO NOT LESS THAN 95% OF MAXIMUM DENSITY AT OPTIMUM MOISTURE CONTENT.

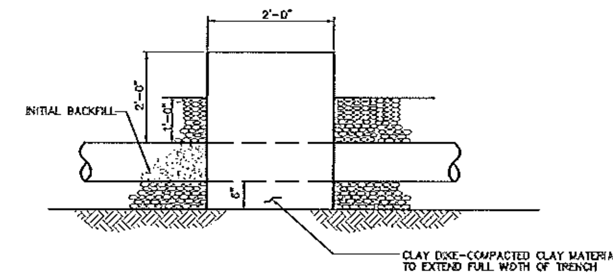

CLAY DIKE DETAIL

NOT TO SCALE

NOTES

* ALL VERTICAL CUTS SHALL BE SAWCUT ONLY

* MATERIAL AND PLACEMENT FOR COARSE AND FINE AGGREGATES SHALL BE IN ACCORDANCE WITH PENNDOT SPECIFICATIONS PUBLICATIONS 408, LATEST EDITION.

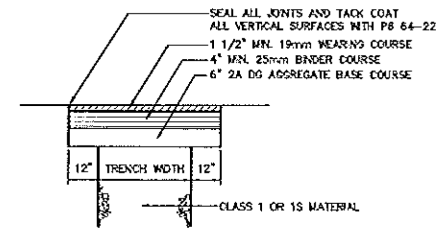

PERMANENT PennDOT AND TWP./BORO. ROAD RESTORATION

NOT TO SCALE

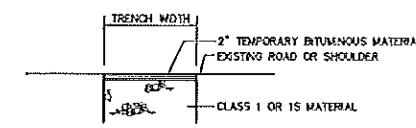

TEMPORARY RESTORATION FOR PennDOT & TOWNSHIP ROADWAYS, ALLEYS OR SHOULDERS

NOT TO SCALE

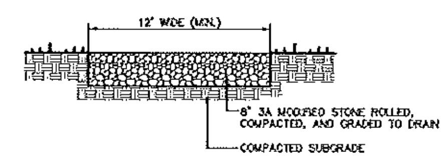

STONE ROADWAY SECTION

NOT TO SCALE

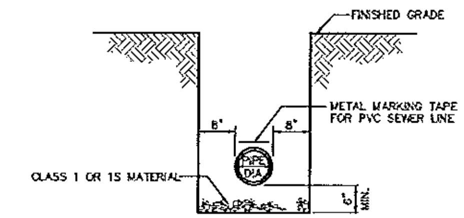

TYPICAL TRENCH DETAIL

NO SCALE

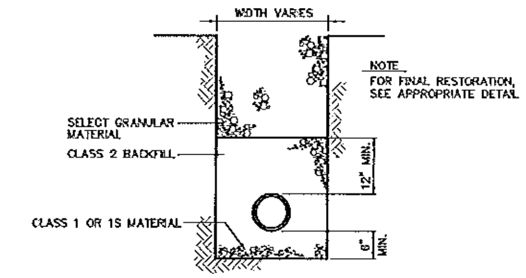

TYPICAL BACKFILL

(NON-PAVED AREAS)

NO SCALE

CLASSIFICATION OF MATERIALS:

CLASS 1 – THIS MATERIAL SHALL CONSIST OF 2A COARSE AGGREGATE OR 2 RC STONE FREE OF SLAG, EXCEPT IN WET OR UNSTABLE AREAS WHERE THE BEDDING MAY BE NO. 8 OR NO. 57 COARSE AGGREGATE. ALL MATERIALS SHALL CONFORM TO PennDOT PUBLICATION 408, SECTION 703.3.

CLASS 1S – THIS MATERIAL SHALL CONSIST OF NO. 8 COARSE AGGREGATE FREE OF SLAG, EXCEPT IN WET OR UNSTABLE AREAS WHERE THE BEDDING MAY BE NO. 8 OR NO. 57 COARSE AGGREGATE. ALL MATERIALS SHALL CONFORM TO PennDOT PUBLICATION 408, SECTION 703.3.

CLASS 2 – THIS MATERIAL SHALL CONSIST OF EXCAVATED MATERIAL FREE FROM CINDERS, ASHES, REFUSE, VEGETABLE OR ORGANIC MATERIAL, BOULDERS, ROCKS NO LARGER THAN FOUR (4) INCHES IN DIMENSION, STONE OR OTHER MATERIAL WHICH IN THE OPINION OF THE ENGINEER IS UNSUITABLE.

CONSTRUCTION NOTES:

1. BROAD-BASED DIP SHOULD BE INSTALLED ACROSS THE ACCESS PATH TO THE UNNAMED TRIBUTARY AS SHOWN ON THE PLAN.

2. CONSTRUCT AT A SLOPE OF 2.0% AND DISCHARGE TO THE UNNAMED TRIBUTARY.

3. DO NOT PLACE ANY OBSTRUCTIONS IN BROAD-BASED DIP (E.G. STRAW BALES, SILT FENCE, ROCK FILTERS, ETC.). WHERE NEEDED, THEY SHOULD BE LOCATED BELOW THE DISCHARGE END OF THE BROAD-BASED DIP.

5. REMOVE ACCUMULATED SEDIMENT AFTER EACH WORK DAY

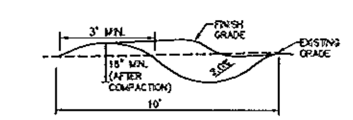

BROAD-BASED DIP

NOT TO SCALE

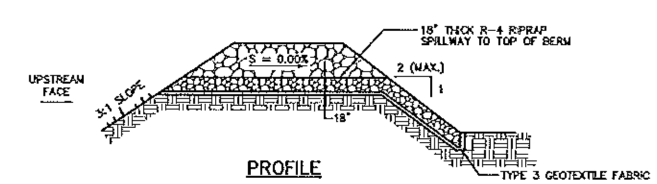

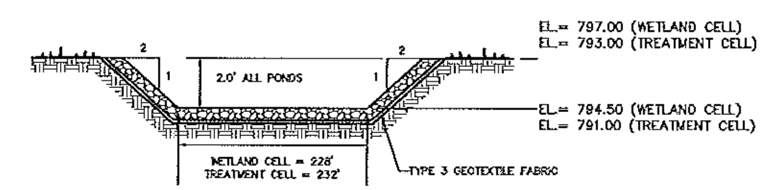

BROAD CRESTED SPILLWAY

NOT TO SCALE

OUTLET	APRON LENGTH	APRON WIDTH	RIPRAP SIZE	RIPRAP THICKNESS
WETLAND CELL	228'	15'	R-4	18"
TREATMENT CELL	232'	15'	R-4 LIMESTONE	18"

NO.	DATE	REVISION
3	9/14/12	CHANGE ORDER #1 SCOPE REDUCTION
2	6/25/12	MINOR REVISIONS FOR BIDDING
1	9/27/11	REVISED PER SCD COMMENTS DATED 9/7/11

FOR RETTEW ASSOCIATES BY:

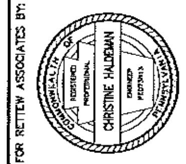

MANAGER: CHARLES MYERS, P.E.
DESIGN BY: CH | CHKD BY: CH
SURV. CHIEF: R. ORNER | FIELDBOOK NO. DATA COLLECTOR
DRAWN BY: | CHKD BY: CLM

XREFS: 04-03883-001-TB 06-03883-002-T01

DRAWING REFERENCE: N:\00\00-04234-008\CADD\CT\COP\00-04234-000-08 Details.dwg

CLIENT
SCHUYLKILL HEADWATERS ASSOCIATION, INC.
P.O. BOX 1385
POTTSVILLE, PA 17901
PHONE: 570-385-2122

SCALE
NO SCALE

RETTEW

RETTEW Associates, Inc.
950 E. Main Street, Suite # 220
Schuylkill Haven, PA 17972
Phone (570) 385-2270 · Fax (570) 385-2217
Email: rettew@rettew.com Website: www.rettew.com

Engineers • Planners • Surveyors • Landscape Architects
Environmental Consultants

ABANDONED MINE DRAINAGE REMEDIATION
FOR THE
MARY D BOREHOLE
DETAIL SHEET
SCHUYLKILL TOWNSHIP SCHUYLKILL COUNTY, PA

DATE: AUG. 11, 2011
SHEET NO. 8 OF 13
DWG. NO. 08-04234-008

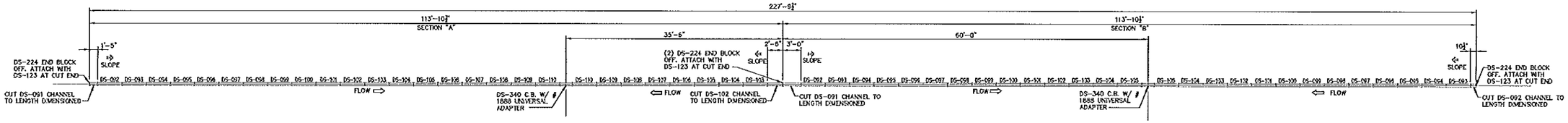

NDS DURASLOPE LAYOUT PLAN

SCALE : 1" = 10'

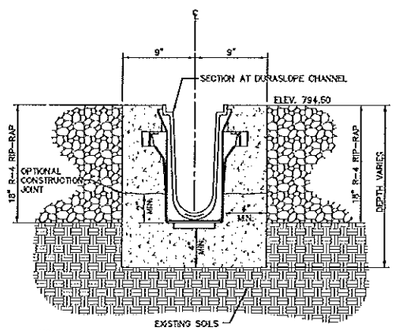

NOTES:
1. SET TRENCH DRAIN IN CHANNEL SURROUNDED BY 4" OF CONCRETE OR THICKNESS OF THE CONCRETE SLAB WITH A MINIMUM OF 2,500 P.S.I.
2. CLASS "B" 4" LOAD APPLICATION FOR CONCRETE

TYPICAL NDS DURASLOPE INSTALLATION

NOT TO SCALE

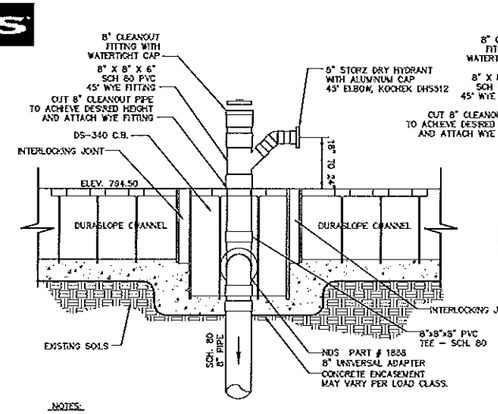

NOTES:
1. 8" PVC IN-LINE BACKWATER VALVE TO BE PLACED BETWEEN DURASLOPE CATCH BASIN AND TEE FITTING NOT SHOWN IN THIS VIEW FOR CLARITY.

TYPICAL DS-340 8" PLUMBING CONNECTION @ C.D. RUN TO CENTER

NOT TO SCALE

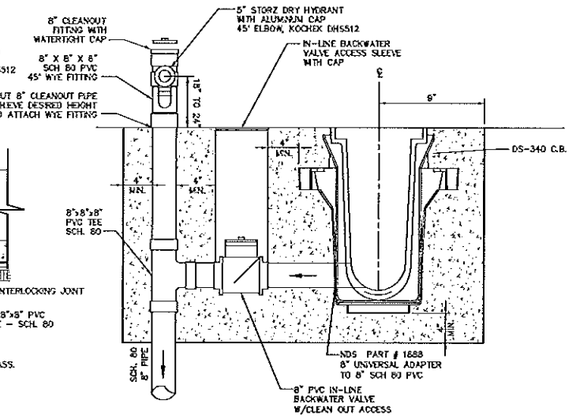

TYPICAL NDS DURASLOPE INSTALLATION SECTION AT CATCH BASIN

NOT TO SCALE

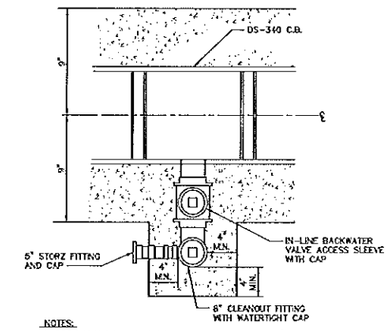

NOTES:
1. SET TRENCH DRAIN IN CHANNEL SURROUNDED BY 4" OF CONCRETE OR THICKNESS OF THE CONCRETE SLAB WITH A MINIMUM OF 2,500 P.S.I.
2. CLASS "B" 4" LOAD APPLICATION FOR CONCRETE.
3. THE STORZ FITTING SHALL FACE VALLEY ROAD.

TYPICAL NDS DURASLOPE INSTALLATION PLAN AT CATCH BASIN

NOT TO SCALE

DURASLOPE PARTS LIST

PART No.	Pcs.	XI
DS-091	2	
DS-092	3	
DS-093	3	
DS-094	3	
DS-095	3	
DS-096	3	
DS-097	3	
DS-098	3	
DS-099	3	
DS-100	3	
DS-101	3	
DS-102	4	
DS-103	4	
DS-104	4	
DS-105	4	
DS-106	2	
DS-107	2	
DS-108	2	
DS-109	2	
DS-110	2	
DS-224	4	
DS-340	2	
# 1888	2	
DS-123	3-pkg	
GRATES:		
DS-670	114	
TOTAL RUN LENGTH 228'		

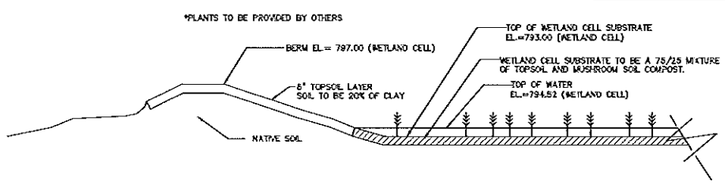

WETLAND CELL PROFILE (TYPICAL)

NOT TO SCALE

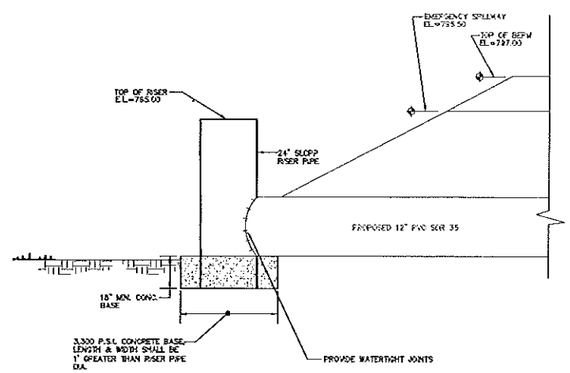

SETTLING POND INFLUENT RISER PIPE

NOT TO SCALE

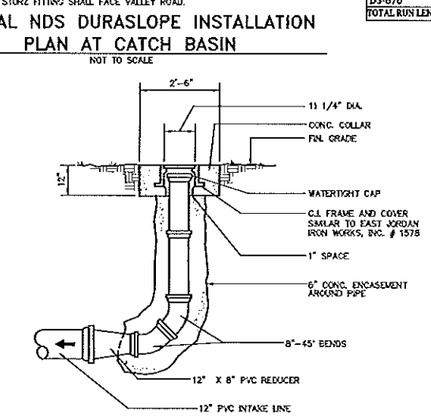

CLEANOUT DETAIL

NOT TO SCALE

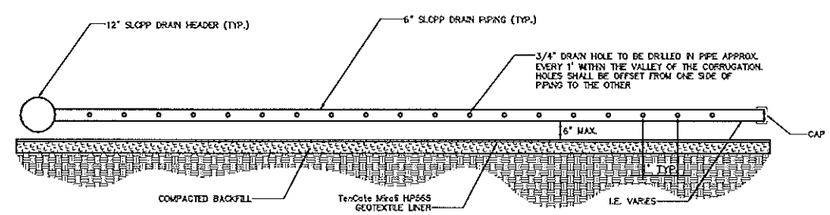

ELEVATION VIEW

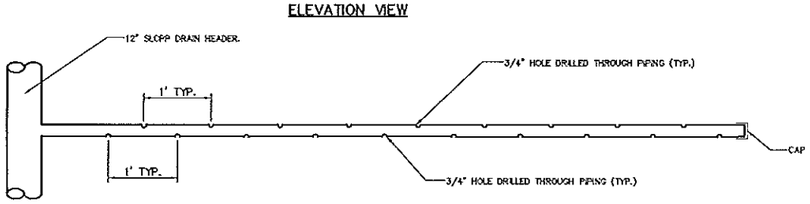

PLAN VIEW

TREATMENT CELL DISTRIBUTION/ FLUSHING PIPE SYSTEM

NOT TO SCALE

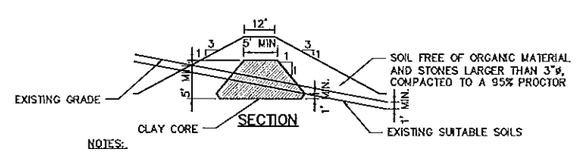

NOTES:
1. CLAY CORE SHALL BE KEYED INTO THE EXISTING GROUND SURFACE. THE CLAY USED IN THE CONSTRUCTION OF THE CORE SHALL CONSIST OF CLAY CONTAINING NO MORE THAN 15% (BY VOLUME) STONE NO LARGER THAN TWO (2) INCHES IN DIAMETER. CLAY SHALL BE PLACED IN SIX (6) INCH LIFTS AND COMPACTED BY A MECHANICAL TAMPER TO NOT LESS THAN 95% OF MAXIMUM DENSITY AT OPTIMUM MOISTURE CONTENT.
2. ALL FINISH GRADE BERM SLOPES SHALL BE 3H:1V.

POND BERMS

NOT TO SCALE

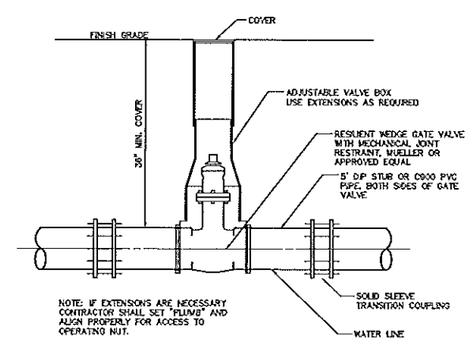

TYPICAL 2" – 12" GATE VALVE & VALVE BOX DETAIL

NOT TO SCALE

NO.	DATE	REVISION
3	9/14/12	CHANGE ORDER #1 SCOPE REDUCTION
2	6/25/12	MINOR REVISIONS FOR BIDDING
1	8/22/11	REVISED PER SCD COMMENTS DATED 9/7/11

FOR RETTEW ASSOCIATES BY:

CHRISTINE HALESKAN

XREFS: XR-1-DWG-001-TB, XR-2-DWG-002-TB

MANAGER: CHARLES MYERS, P.E.
DESIGN BY: CHKD BY: CJL
SURV. CHIEF: R. GRINER
FIELDBOOK NO. DATA COLLECTOR
DRAWN BY: CHKD BY: CJM
DRAWING REFERENCE: N:\08-04234-008\CAD\C3D\C3D\08-04234-008-TB-DetailSheet.dwg

CLIENT
SCHUYLKILL HEADWATERS ASSOCIATION, INC.
P.O. BOX 1385
POTTSVILLE, PA 17901
PHONE: 570-385-2122

SCALE: NO SCALE

RETTEW
RETTEW Associates, Inc.
650 E. Main Street, Suite # 220
Schuylkill Haven, PA 17972
Phone: (570) 385-2217 Fax: (570) 385-2227
Email: rettew@rettew.com Website: www.rettew.com
Engineers • Planners • Surveyors • Landscape Architects
Environmental Consultants

ABANDONED MINE DRAINAGE REMEDIATION FOR THE

MARY D BOREHOLE

DETAIL SHEET

SCHUYLKILL TOWNSHIP SCHUYLKILL COUNTY, PA

DATE: AUG. 11, 2011

SHEET NO. 9 OF 13

DWG. NO. 08-04234-008

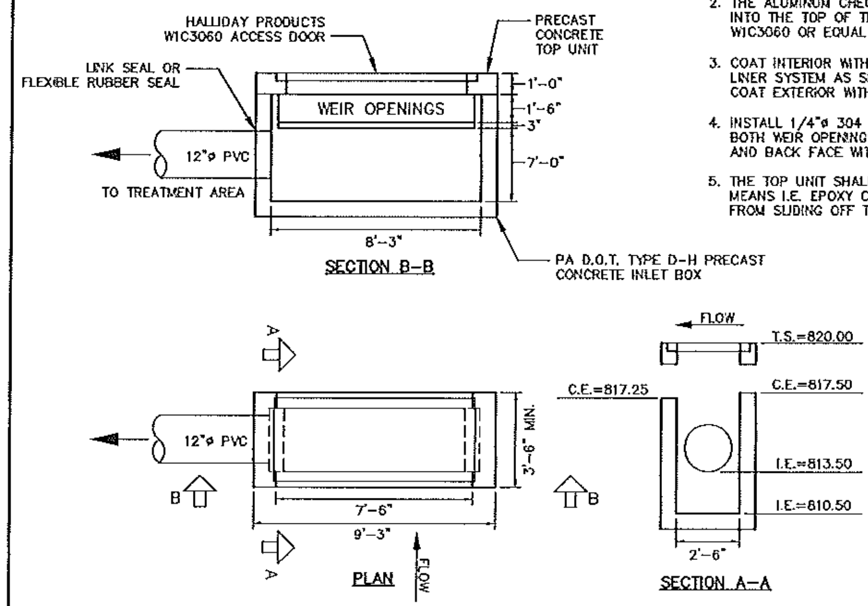

INFLUENT STRUCTURE

NOT TO SCALE

NOTES

1. CONCRETE STRUCTURE STEEL REINFORCING DESIGN SHALL BE BY THE PRECAST MANUFACTURER. THE REINFORCING DESIGN SHALL BE INCLUDED IN THE SHOP DRAWING SUBMITTAL. THE DESIGN SHALL BE SEALED BY A PROFESSIONAL ENGINEER LICENSED IN THE STATE OF PENNSYLVANIA.
2. THE ALUMINUM CHECK PLATE ACCESS HATCH SHALL BE CAST INTO THE TOP OF THE STRUCTURE AND SHALL BE HALLIDAY W1C3060 OR EQUAL WITH PADLOCK AND HASP.
3. COAT INTERIOR WITH EITHER PVC LINER SYSTEM OR HDPE/PP-R LINER SYSTEM AS SPECIFIED IN SPECIFICATION SECTION 02730, COAT EXTERIOR WITH 2 COATS PENNSBURY 32-B-4 COATING.
4. INSTALL 1/4"ø 304 S.S. BAR SCREEN, WITH BARS 6" O.C. ON BOTH WEIR OPENINGS. SCREEN SHALL BE ATTACHED TO FRONT AND BACK FACE WITH S.S. ANCHOR BOLTS.
5. THE TOP UNIT SHALL BE ANCHORED TO INLET BOX BY PHYSICAL MEANS I.E. EPOXY COATED REBAR POSTS, TO PREVENT THE UNIT FROM SLIDING OFF THE INLET BOX FROM FLOWING WATER.

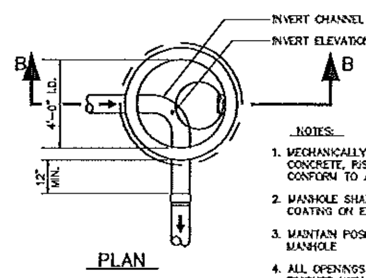

NOTES:

1. MECHANICALLY VIBRATED PRECAST CONCRETE, RISER AND TOP SHALL CONFORM TO A.S.T.M. SPEC. C-478.
2. MANHOLE SHALL HAVE BITUMASTIC COATING ON EXTERIOR WALLS
3. MAINTAIN POSITIVE GRADE THROUGH MANHOLE
4. ALL OPENINGS AROUND PIPES SHALL BE FINISHED WITH NON-SHRINK GROUT
5. CONTRACTOR MAY USE PRECAST INVERT BASES.

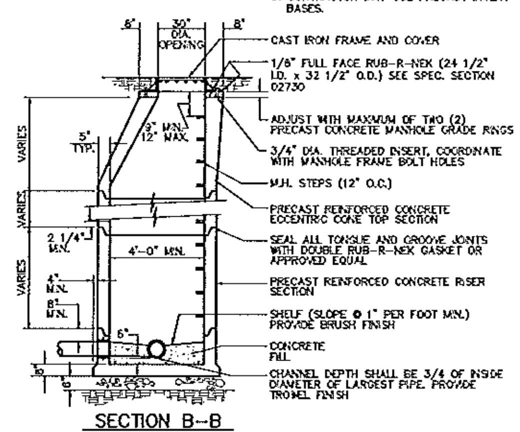

PRECAST CONCRETE MANHOLE

NOT TO SCALE

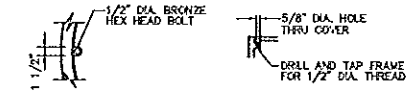

COVER TO FRAME BOLT HOLE

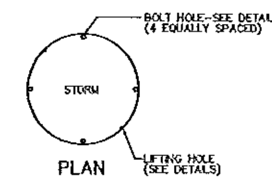

NOTES

1. ALL MANHOLE FRAME AND COVER DIMENSIONS SHALL BE CONSIDERED MINIMUM, UNLESS OTHERWISE NOTED, WITH THE EXCEPTION OF THE BOLT HOLE AND CORED HOLE DIMENSIONS.
2. ALL MANHOLE FRAMES AND COVERS SHALL BE FOR HEAVY DUTY TRAFFIC
3. ALL COVERS SHALL BE SELF SEALING

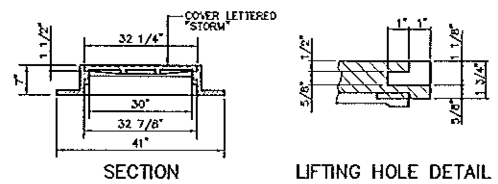

WATERTIGHT FRAME AND COVER

NOT TO SCALE

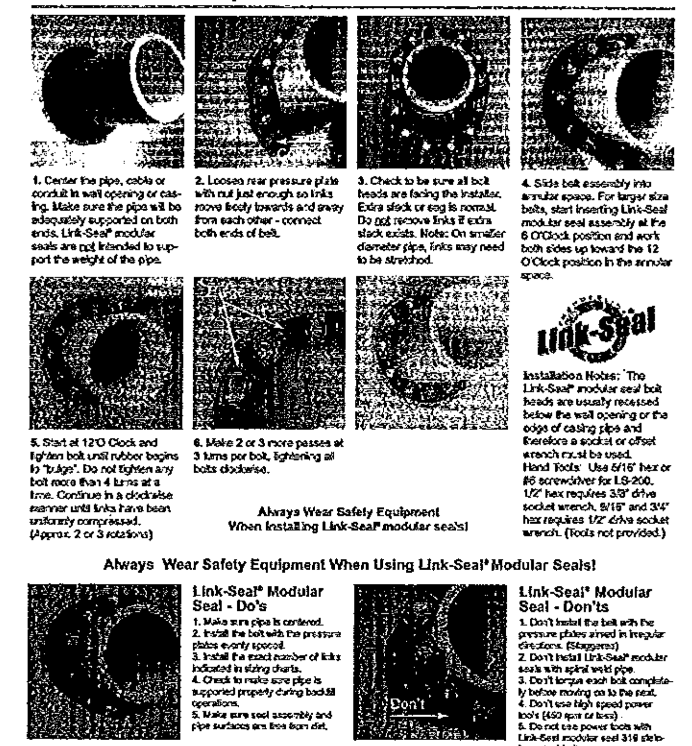

Installation Techniques - Link-Seal® Modular Seals

1. Center the pipe, cable or conduit in wall opening or casing. Make sure the pipe will be adequately supported on both ends. Link-Seal® modular seals are not intended to support the weight of the pipe.

2. Loosen rear pressure plate with nut just enough so links move freely towards and away from each other - connect both ends of belt.

3. Check to be sure all bolt heads are facing the installer. Extra slack or sag is normal. Do not remove links if extra slack exists. Note: On smaller diameter pipe, links may need to be stretched.

4. Slide bolt assembly into annular space. For larger size belts, start inserting Link-Seal modular seal assembly at the 6 O'Clock position and work both sides up toward the 12 O'Clock position in the annular space.

5. Start at 12 O'Clock and tighten bolt until rubber begins to "bulge". Do not tighten any bolt more than 4 turns at a time. Continue in a clockwise manner until links have been uniformly compressed. (Approx. 2 or 3 rotations)

6. Make 2 or 3 more passes at 3 turns per bolt, tightening all bolts clockwise.

Always Wear Safety Equipment When Installing Link-Seal® modular seals!

Installation Notes: The Link-Seal® modular seal bolt heads are usually recessed below the wall opening or the edge of casing pipe and therefore a socket or offset wrench must be used. Hand Tools: Use 5/16" hex or #6 screwdriver for LS-200. 1/2" hex requires 3/8" drive socket wrench. 9/16" and 3/4" hex requires 1/2" drive socket wrench. (Tools not provided.)

Always Wear Safety Equipment When Using Link-Seal® Modular Seals!

Link-Seal® Modular Seal - Do's

1. Make sure pipe is centered.
2. Install the belt with the pressure plates evenly spaced.
3. Install the exact number of links indicated in sizing charts.
4. Check to make sure pipe is supported properly during backfill operations.
5. Make sure seal assembly and pipe surfaces are free from dirt.

Link-Seal® Modular Seal - Don'ts

1. Don't install the belt with the pressure plates aimed in irregular directions. (Staggered)
2. Don't install Link-Seal® modular seals with spiral weld pipe.
3. Don't torque each bolt completely before moving on to the next.
4. Don't use high speed power tools (450 rpm or less).
5. Do not use power tools with Link-Seal modular seal 316 stainless steel bolts.

LINK-SEAL NOTES:

1. CONTRACTOR SHALL PROVIDE AND INSTALL LINK-SEALS WITH SLEEVES AT ALL PIPE PENETRATIONS. SLEEVES SHALL BE PRECAST INTO THE STRUCTURE WALLS AS NOTED (NO COLD JOINTS), TO BECOME AN INTEGRAL PART OF THE CONCRETE. GROUTING SLEEVES IN PLACE WITH COLD JOINTS WILL NOT BE ACCEPTABLE.
2. AN ALTERNATIVE TO THE PRECAST SLEEVE IS FOR THE CONTRACTOR TO CORE DRILL ALL PIPE PENETRATIONS IN THE CORRECT LOCATION AND INSTALL LINK-SEALS.
3. CONTRACTOR SHALL DETERMINE CORRECT SIZE OF ALL LINK-SEALS, SLEEVES AND CORE DRILLING.
4. ALL SHOP DRAWINGS SHALL SHOW AND CALL OUT LOCATION OF PRECAST SLEEVES OR CORE DRILLING.

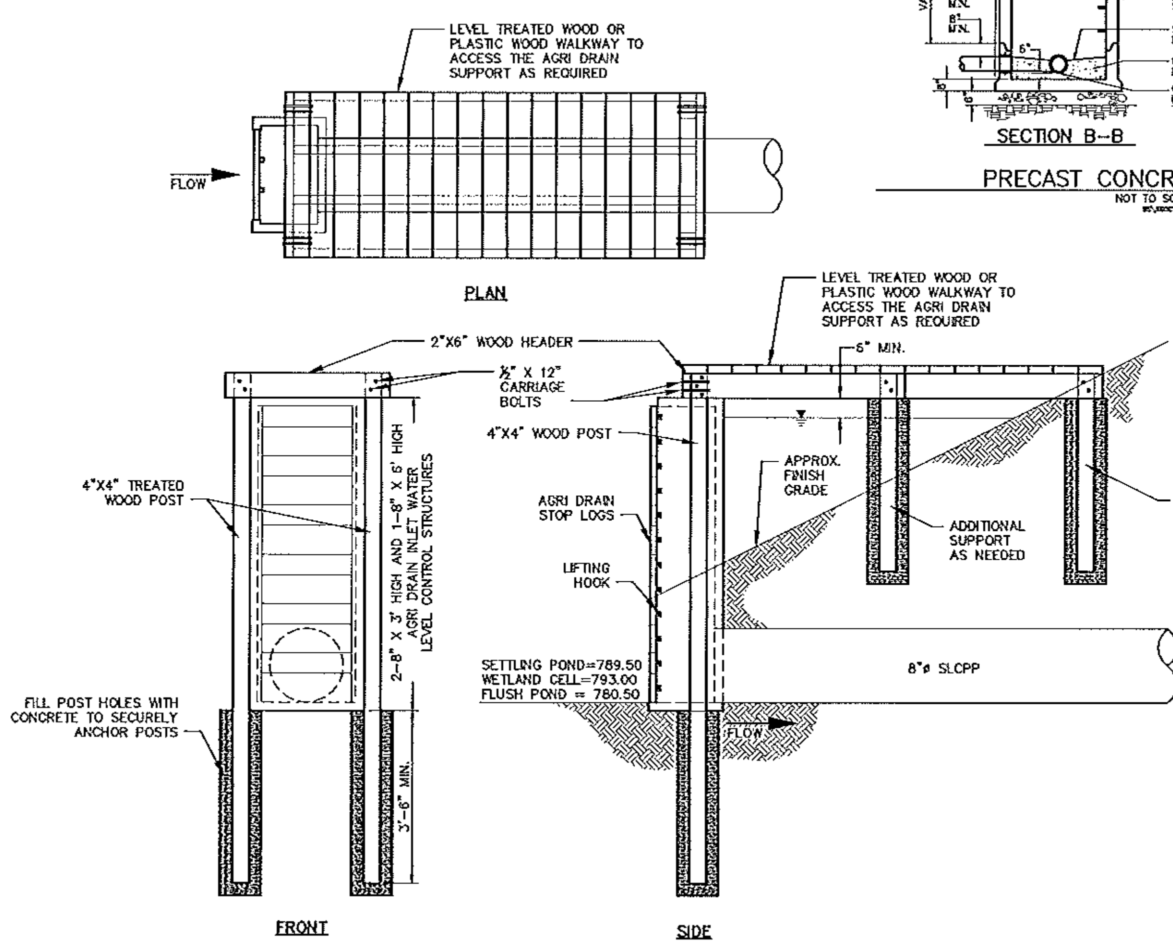

AGRI-DRAIN INLET WATER LEVEL CONTROL STRUCTURE AND WALKWAY ASSEMBLY DETAIL

NOT TO SCALE

MATERIALS KEY

KEY #	ITEM
1	6" HYDRANT ASSEMBLY - 90° BEND
2	HYDRANT CAP (6" NST MALE)
3	6" 3' PVC STRAINER
4	6" SCH. 40 PVC 90° ELBOW
5	6" SCH. 40 PVC PIPE-RISER
6	6" SCH. 40 PVC PIPE
7	6" SCH. 40 PVC COUPLINGS
8	6" STRAINER CAP
9	UNDER-WATER SUPPORT
10	10" SCH. 40 PVC PIPE
11	10" SCH. 40 PVC CAP
12	END FITTING (6" NST FEMALE W/SWIVEL)
13	6" PVC ELBOW OR COUPLING AS REQ'D
14	2' X 2' ANTI-SEEP COLLAR

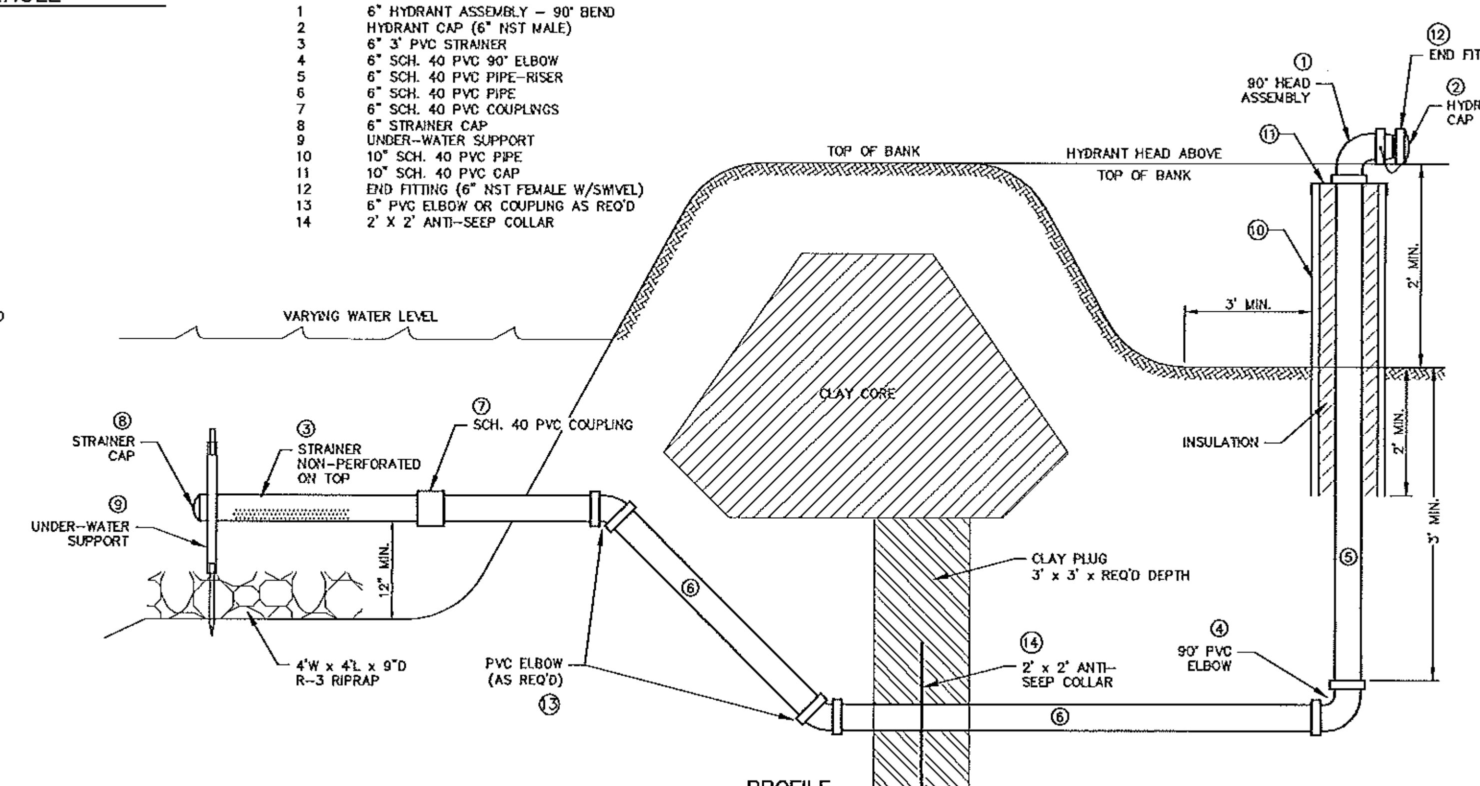

DRY HYDRANT

NOT TO SCALE

NO.	DATE	REVISION
3	9/14/12	CHANGE ORDER #1 SCOPE REDUCTION
2	6/25/12	MINOR REVISIONS FOR BIDDING
1	9/27/11	REVISED PER SCD COMMENTS DATED 9/7/11

FOR RETTEW ASSOCIATES BY: CHRISTINE HALDEMAN, REGISTERED PROFESSIONAL ENGINEER, PE073813, COMMONWEALTH OF PENNSYLVANIA

MANAGER: CHARLES MYERS, P.E. XREFS: 04-03893-001-TI 08-03893-002-TB1
DESIGN BY: CH CHKD BY: CH
SURV. CHIEF: R. ORNER FIELDBOOK NO. DATA COLLECTOR
DRAWN BY: CHKD BY: CLM
DRAWING REFERENCE: N:\08\08-04234-001\CAD\CE\Cd\08-04234-008-08 Details.dwg

CLIENT
SCHUYLKILL HEADWATERS ASSOCIATION, INC.
P.O. BOX 1385
POTTSVILLE, PA 17901
PHONE: 570-385-2122

SCALE
NO SCALE

RETTEW
RETTEW Associates, Inc.
950 E. Main Street, Suite # 220
Schuylkill Haven, PA 17972
Phone (570) 385-2270 · Fax (570) 385-2217
Email: rettew@rettew.com Website: www.rettew.com
Engineers • Planners • Surveyors • Landscape Architects • Environmental Consultants

ABANDONED MINE DRAINAGE REMEDIATION
FOR THE
MARY D BOREHOLE
DETAILS SHEET
SCHUYLKILL TOWNSHIP SCHUYLKILL COUNTY, PA

DATE: AUG. 11, 2011
SHEET NO. 10 OF 13
DWG. NO. 08-04234-008

EROSION & SEDIMENT POLLUTION CONTROL NOTES:

STANDARD SEDIMENT AND EROSION CONTROL PLAN NOTES

102.2(A) "THIS CHAPTER REQUIRES PERSONS PROPOSING OR CONDUCTING EARTH DISTURBANCE ACTIVITIES TO DEVELOP, IMPLEMENT AND MAINTAIN BMPS TO MINIMIZE THE POTENTIAL FOR ACCELERATED EROSION AND SEDIMENTATION."

102.4(B)(3) "THE EROSION AND SEDIMENT CONTROL PLAN SHALL BE PREPARED BY A PERSON TRAINED AND EXPERIENCED IN EROSION AND SEDIMENT CONTROL METHODS AND TECHNIQUES, AND SHALL BE DESIGNED TO MINIMIZE THE POTENTIAL FOR ACCELERATED EROSION AND SEDIMENTATION."

1. VEHICLES AND EQUIPMENT MUST ENTER AND EXIT THE CONSTRUCTION SITE VIA THE ROCK CONSTRUCTION ENTRANCE LOCATED ON VALLEY STREET.
2. STOCKPILE HEIGHTS MUST NOT EXCEED 35 FEET. STOCKPILE SLOPES MUST BE 2:1 OR FLATTER. E&SPCPM PG 168
3. THE OPERATOR SHALL ASSURE THAT THE APPROVED EROSION AND SEDIMENT CONTROL PLAN IS PROPERLY AND COMPLETELY IMPLEMENTED.
4. UNTIL THE SITE ACHIEVES FINAL STABILIZATION, THE OPERATOR SHALL ASSURE THAT THE BMPS ARE IMPLEMENTED, OPERATED, AND MAINTAINED PROPERLY AND COMPLETELY. MAINTENANCE SHALL INCLUDE INSPECTIONS OF ALL BMP FACILITIES. THE OPERATOR WILL MAINTAIN AND MAKE AVAILABLE TO SCHUYLKILL CONSERVATION DISTRICT COMPLETE, WRITTEN INSPECTION LOGS OF ALL THOSE INSPECTIONS. ALL MAINTENANCE WORK, INCLUDING CLEANING, REPAIR, REPLACEMENT, REGRADING, AND RESTABILIZATION SHALL BE PERFORMED IMMEDIATELY.
5. IMMEDIATELY UPON DISCOVERING UNFORESEEN CIRCUMSTANCES POSING THE POTENTIAL FOR ACCELERATED EROSION AND OR SEDIMENT POLLUTION, THE OPERATOR SHALL IMPLEMENT APPROPRIATE BMPS TO ELIMINATE POTENTIAL FOR ACCELERATED EROSION AND/OR SEDIMENT POLLUTION.
6. BEFORE INITIATING ANY REVISIONS TO THE APPROVED EROSION AND SEDIMENT CONTROL PLAN OR REVISIONS TO OTHER PLANS WHICH MAY AFFECT THE EFFECTIVENESS OF THE APPROVED E&S CONTROL PLAN, THE OPERATOR MUST RECEIVE APPROVAL OF THE REVISIONS FROM THE SCHUYLKILL CONSERVATION DISTRICT.
7. THE OPERATOR SHALL ASSURE THAT AN EROSION AND SEDIMENT CONTROL PLAN HAS BEEN PREPARED, APPROVED BY THE SCHUYLKILL CONSERVATION DISTRICT, AND IS BEING IMPLEMENTED AND MAINTAINED FOR ALL SOIL AND/OR ROCK SPOIL AND BORROW AREAS, REGARDLESS OF THEIR LOCATIONS.
8. ALL PUMPING OF SEDIMENT LADEN WATER SHALL BE THROUGH A SEDIMENT CONTROL BMP, SUCH AS A PUMPED WATER FILTER BAG DISCHARGING OVER NON-DISTURBED AREAS.
9. THE CONTRACTOR IS ADVISED TO BECOME THOROUGHLY FAMILIAR WITH THE PROVISIONS OF THE APPENDIX 64, EROSION CONTROL RULES AND REGULATIONS, TITLE 25, PART 1, DEPARTMENT OF ENVIRONMENTAL PROTECTION, SUBPART C, PROTECTION OF NATURAL RESOURCES, ARTICLE II, WATER RESOURCES, CHAPTER 102, EROSION CONTROL.
10. A COPY OF THE APPROVED EROSION AND SEDIMENT CONTROL PLAN MUST BE AVAILABLE AT THE PROJECT SITE AT ALL TIMES.

102.4(B)(5)(I) "THE EXISTING TOPOGRAPHIC FEATURES OF THE PROJECT SITE AND THE IMMEDIATE SURROUNDING AREA."

11. THE E&S CONTROL PLAN MAPPING MUST DISPLAY A PA ONE CALL SYSTEM INCORPORATED SYMBOL INCLUDING THE SITE IDENTIFICATION NUMBER. (THIS IS A NUMBERED SYMBOL NOT A NOTE.)

102.4(B)(5)(VII) "A SEQUENCE OF BMP INSTALLATION AND REMOVAL IN RELATION TO THE SCHEDULING OF EARTH DISTURBANCE ACTIVITIES, PRIOR TO, DURING AND AFTER EARTH DISTURBANCE ACTIVITIES."

102.4(B)(4) EARTH DISTURBANCE ACTIVITIES SHALL BE PLANNED AND CONDUCTED TO MINIMIZE THE EXTENT AND DURATION OF EARTH DISTURBANCE."

102.22(A) "UPON COMPLETION OF AN EARTH DISTURBANCE ACTIVITY OR ANY STAGE OR PHASE OF AN ACTIVITY, THE SITE SHALL BE IMMEDIATELY SEEDED, MULCHED OR OTHERWISE PROTECTED FROM ACCELERATED EROSION AND SEDIMENTATION."

12. ONLY LIMITED DISTURBANCE WILL BE PERMITTED TO PROVIDE ACCESS TO THE SITE FOR GRADING AND ACQUIRING BORROW TO CONSTRUCT BMPS. E&SPCPM PG 168
13. EROSION AND SEDIMENT BMPS MUST BE CONSTRUCTED, STABILIZED, AND FUNCTIONAL BEFORE SITE DISTURBANCE BEGINS WITHIN THE TRIBUTARY AREAS OF THOSE BMPS. E&SPCPM PG 168
14. AFTER FINAL SITE STABILIZATION HAS BEEN ACHIEVED, TEMPORARY EROSION AND SEDIMENT BMPS MUST BE REMOVED. AREAS DISTURBED DURING REMOVAL OF THE BMPS MUST BE STABILIZED IMMEDIATELY. E&SPCPM PG 168
15. AT LEAST 7 DAYS BEFORE STARTING ANY EARTH DISTURBANCE ACTIVITIES, THE OPERATOR SHALL INVITE ALL CONTRACTORS INVOLVED IN THOSE ACTIVITIES, THE LANDOWNER, ALL APPROPRIATE MUNICIPAL OFFICIALS, THE EROSION AND SEDIMENT CONTROL PLAN PREPARER, AND THE SCHUYLKILL CONSERVATION DISTRICT TO AN ON-SITE MEETING. ALSO, AT LEAST 3 DAYS BEFORE STARTING ANY EARTH DISTURBANCE ACTIVITIES, ALL CONTRACTORS INVOLVED IN THOSE ACTIVITIES SHALL NOTIFY THE PENNSYLVANIA ONE CALL SYSTEM INCORPORATED AT 1-800-242-1776 FOR BURIED UTILITIES LOCATIONS.
16. ALL EARTH DISTURBANCE ACTIVITIES SHALL PROCEED IN ACCORDANCE WITH THE CONSTRUCTION SEQUENCE. EACH STAGE SHALL BE COMPLETED BEFORE ANY FOLLOWING STAGE IS INITIATED. CLEARING AND GRUBBING SHALL BE LIMITED ONLY TO THOSE AREAS DESCRIBED IN EACH STAGE.
17. IMMEDIATELY AFTER EARTH DISTURBANCE ACTIVITIES CEASE, THE OPERATOR SHALL STABILIZE ANY AREAS DISTURBED BY THE ACTIVITIES. DURING NON-GERMINATING PERIODS, MULCH MUST BE APPLIED AT THE SPECIFIED RATES. DISTURBED AREAS WHICH ARE NOT AT FINISHED GRADE AND WHICH WILL BE REDISTURBED WITHIN 1 YEAR MUST BE STABILIZED IN ACCORDANCE WITH THE TEMPORARY VEGETATIVE STABILIZATION SPECIFICATIONS. DISTURBED AREAS WHICH ARE AT FINISHED GRADE OR WHICH WILL NOT BE REDISTURBED WITHIN 1 YEAR MUST BE STABILIZED IN ACCORDANCE WITH THE PERMANENT VEGETATIVE STABILIZATION SPECIFICATIONS.
18. AN AREA SHALL BE CONSIDERED TO HAVE ACHIEVED FINAL STABILIZATION WHEN IT HAS A MINIMUM UNIFORM 70% PERENNIAL VEGETATIVE COVER OR OTHER PERMANENT NON-VEGETATIVE COVER WITH A DENSITY SUFFICIENT TO RESIST ACCELERATED EROSION AND SUBSURFACE CHARACTERISTICS SUFFICIENT TO RESIST SLIDING AND OTHER MOVEMENTS.

SEDIMENT BASINS

19. SEDIMENT BASINS MUST BE PROTECTED FROM UNAUTHORIZED ACTS OF THIRD PARTIES.

OTHER BMPS (SPECIFY)

20. AT STREAM CROSSINGS, 50' BUFFER AREAS SHOULD BE MAINTAINED. ON BUFFERS, CLEARING, SOD DISTURBANCES, EXCAVATION, AND EQUIPMENT TRAFFIC SHOULD BE MINIMIZED. ACTIVITIES SUCH AS STACKING LOGS, BURNING CLEARED BRUSH, DISCHARGING RAINWATER FROM TRENCHES, WELDING PIPE SECTIONS, REFUELING AND MAINTAINING EQUIPMENT SHOULD BE ACCOMPLISHED OUTSIDE OF BUFFERS.

TEMPORARY STABILIZATION AND PERMANENT STABILIZATION

21. HAY OR STRAW MULCH MUST BE APPLIED AT 3.0 TONS PER ACRE.
22. MULCH WITH MULCH CONTROL NETTING OR EROSION CONTROL BLANKETS MUST BE INSTALLED ON ALL SLOPES 3:1 AND STEEPER.
23. STRAW MULCH SHALL BE APPLIED IN LONG STRANDS, NOT CHOPPED OR FINELY BROKEN.

102.4(B)(5)(X) "A MAINTENANCE PROGRAM WHICH PROVIDES FOR INSPECTION OF BMPS ON A WEEKLY BASIS AND AFTER EACH MEASURABLE RAINFALL EVENT, INCLUDING THE REPAIR OF THE BMPS TO ENSURE EFFECTIVE AND EFFICIENT OPERATION."

24. UNTIL THE SITE IS STABILIZED, ALL EROSION AND SEDIMENT BMPS MUST BE MAINTAINED PROPERLY. MAINTENANCE MUST INCLUDE INSPECTIONS OF ALL EROSION AND SEDIMENT CONTROL BMPS AFTER EACH RUNOFF EVENT AND ON A WEEKLY BASIS. ALL PREVENTATIVE AND REMEDIAL MAINTENANCE WORK, INCLUDING CLEAN OUT, REPAIR, REPLACEMENT, REGRADING, RESEEDING, REMULCHING, AND RENETTING, MUST BE PERFORMED IMMEDIATELY. IF EROSION AND SEDIMENT CONTROL BMPS FAIL TO PERFORM AS EXPECTED, REPLACEMENT BMPS, OR MODIFICATIONS OF THOSE INSTALLED WILL BE REQUIRED. E&SPCPM PG 168
25. SEDIMENT REMOVED FROM BMPS SHALL BE DISPOSED OF IN LANDSCAPED AREAS OUTSIDE OF STEEP SLOPES, WETLANDS, FLOODPLAINS OR DRAINAGE SWALES AND IMMEDIATELY STABILIZED, OR PLACED IN TOPSOIL STOCKPILES.

102.4(B)(5)(XI) PROCEDURES WHICH ENSURE THAT THE PROPER MEASURES FOR THE RECYCLING OR DISPOSAL OF MATERIALS ASSOCIATED WITH OR FROM THE PROJECT SITE WILL BE UNDERTAKEN IN ACCORDANCE WITH THIS TITLE."

26. THE OPERATOR SHALL REMOVE FROM THE SITE, RECYCLE, OR DISPOSE OF ALL BUILDING MATERIALS AND WASTES IN ACCORDANCE WITH THE DEPARTMENT'S SOLID WASTE MANAGEMENT REGULATIONS AT 25 PENNSYLVANIA CODE 260.1 ET SEQ., 271.1 ET SEQ., AND 287.1 ET SEQ. THE CONTRACTOR SHALL NOT ILLEGALLY BURY, DUMP, OR DISCHARGE ANY BUILDING MATERIAL OR WASTES AT THE SITE."

GENERAL SEDIMENT AND EROSION CONTROL METHODS/PROCEDURES

1. IN ALL CASES, THE SMALLEST PRACTICAL AREA OF STABLE LAND SURFACE SHALL BE DISTURBED.
2. UTILITY EXCAVATIONS SHALL BE OPEN ONLY LONG ENOUGH TO PROPERLY INSTALL AND INSPECT ALL UNDERGROUND FACILITIES IN ACCORDANCE WITH APPLICABLE SPECIFICATIONS.
3. EXCAVATED MATERIAL (SPOIL) SHALL BE PLACED UP SLOPE FROM THE EXCAVATION WHENEVER POSSIBLE. RUNOFF FROM SPOIL PILES SHALL BE DIRECTED THROUGH A SEDIMENT FILTER STRUCTURE AND DISCHARGED IN A NON-EROSIVE MANNER.
4. BACKFILLED EXCAVATIONS SHALL BE RESTORED TO ORIGINAL TYPE OF COVER AND GRADE AS PER SPECIFICATIONS. SEEDING SHALL BE DONE ACCORDING TO SCHEDULE FOR PERMANENT SEEDING. TEMPORARY STABILIZATION IS REQUIRED FOR ANY AND ALL ERODIBLE/SOLUBLE AREAS AND MATERIALS TO BE EXPOSED.
5. LAWN AREAS SHALL BE FINISHED GRADED WITH 6-INCHES OF TOPSOIL UNLESS OTHERWISE NOTED. POSITIVE DRAINAGE SHALL BE MAINTAINED AWAY FROM ALL STRUCTURES. NO ISOLATED LOW SPOTS SHALL BE CREATED.
6. SEDIMENT SPILLED, DROPPED OR TRACKED ONTO PAVED SURFACES SHALL BE REMOVED IMMEDIATELY.
7. AT THE END OF EACH WORKING DAY, ANY SEDIMENT TRACKED OR CONVEYED ONTO A PUBLIC ROADWAY WILL BE REMOVED AND RE-DEPOSITED ONTO THE CONSTRUCTION SITE. REMOVAL CAN BE COMPLETED THROUGH USE OF MECHANICAL OR HAND TOOLS, BUT MUST NEVER BE WASHED OFF THE ROAD BY USE OF WATER.
8. FILTER FABRIC FENCE MUST BE INSTALLED AT LEVEL GRADE. BOTH ENDS OF EACH FENCE SECTION MUST EXTEND AT LEAST 8' UPSLOPE AT 45 DEGREES TO THE MAIN FENCE ALIGNMENT.
9. ANY FENCE SECTION, WHICH HAS BEEN UNDERMINED OR TOPPED, MUST BE IMMEDIATELY REPLACED WITH A ROCK FILTER OUTLET. (SEE ROCK FILTER OUTLET DETAIL.)
10. WHERE ENDS OF FILTER FABRIC COME TOGETHER, THEY MUST BE OVERLAPPED, FOLDED AND STAPLED TO PREVENT SEDIMENT BYPASS. THE TOE ANCHOR MUST BE BACKFILLED AND COMPACTED TO A DENSITY EQUAL TO THE SURROUNDING SOILS.
11. DIVERSION CHANNELS, SEDIMENTATION BASINS, AND STOCKPILES MUST BE STABILIZED IMMEDIATELY.
12. SEDIMENT MUST BE REMOVED WHEN ACCUMULATIONS REACH 1/3 THE HEIGHT OF THE OUTLETS.
13. THE HEIGHT OF THE ROCK FILTER SHOULD EQUAL 5/6 THE HEIGHT OF THE STRAW BALES OR FILTER FABRIC.
14. ROCK CONSTRUCTION ENTRANCE THICKNESS WILL BE CONSTANTLY MAINTAINED TO THE SPECIFIED DIMENSIONS BY ADDING ROCK. A STOCKPILE OF ROCK MATERIAL WILL BE MAINTAINED ON THE SITE FOR THIS PURPOSE. AT THE END OF EACH CONSTRUCTION DAY, ALL SEDIMENT DEPOSITED ON PUBLIC ROADWAYS WILL BE REMOVED AND RETURNED TO THE CONSTRUCTION SITE.

RESTORATION OF PLANTING AREAS

1. IF EARTH DISTURBANCE OCCURS DURING THE MONTHS OF NOVEMBER THROUGH MARCH, THEN AROOSTOOK WINTER RYE SHALL BE APPLIED TO DISTURBED AREAS AS A TEMPORARY SEED MIXTURE. IF STABILIZATION CANNOT BE ACHIEVED WITH AROOSTOOK WINTER RYE, THEN MULCH WITH TACKIFIER SHALL BE APPLIED TO DISTURBED AREAS. MULCH SHALL BE CLEAN OAT OR WHEAT STRAW AND SHALL BE APPLIED AT THE RATE OF 3 TONS PER ACRE. TACKIFIER SHALL BE APPLIED AT THE MANUFACTURER'S APPLIED RATE. AREAS THAT LOSE THE MULCH COVER SHALL BE REMULCHED.
2. FINAL RESTORATION SHALL BE PERFORMED NO LATER THAN THE START OF THE NEXT PLANTING SEASON FOLLOWING CONSTRUCTION. THE PLANTING SEASON SHALL BE AS ESTABLISHED BY THE U.S. AGRICULTURAL SERVICE FOR THE AREA OF CONSTRUCTION.
3. TOPSOIL SHALL BE FREE FROM SUBSOIL, BRUSH, WEEDS, OR OTHER LITTER, CLAY LUMPS AND STONES, BUT MAY CONTAIN DECAYING VEGETABLE MATTER AS IS PRESENT IN GOOD TOPSOIL.
4. PRECAUTIONS SHALL BE EXERCISED AS NECESSARY TO CONFORM WITH LAWS RELATING TO EROSION AND SEDIMENT CONTROL.
5. SEED SHALL BE NOT MORE THAN TWO (2) YEARS OLD. GERMINATION TESTS OF SEEDS SHALL BE MADE NOT MORE THAN SIX (6) MONTHS PRIOR TO SEEDING. SEED THAT HAS BECOME WET, MOLDY, OR OTHERWISE DAMAGED SHALL NOT BE USED.
6. ALL SEED MIXTURES SHALL BE SUBMITTED TO THE ENGINEER FOR APPROVAL PRIOR TO SEEDING.
7. THE CONTRACTOR SHALL BE RESPONSIBLE TO PRODUCE A STAND OF GRASS IN ALL SEEDED OR SODDED AREAS. EROSION, DROUGHT, OR ANY OTHER CONDITION ENCOUNTERED SHALL NOT RELIEVE THE CONTRACTOR OF THIS REQUIREMENT.

SEEDING NOTES: TEMPORARY

MULCH – CLEAN OAT OR WHEAT STRAW SHALL BE FREE FROM MATURE SEED-BEARING STALKS OR ROOTS OF PROHIBITED OR NOXIOUS WEEDS AS DEFINED BY THE PENNSYLVANIA SEED ACT OF 1947. APPLY AT A RATE 3 TONS PER ACRE. PRECAUTIONS SHALL BE TAKEN TO STABILIZE THE MULCH UNTIL THE VEGETATIVE COVER IS ESTABLISHED.

SEED MIXTURE SHALL BEAR A GUARANTEED STATEMENT OF ANALYSIS AND SHALL BE COMPOSED OF THE VARIETIES FOLLOWING AND MIXED IN THE PROPORTIONS SPECIFIED.

TEMPORARY SEED MIXTURE	PROPORTION BY WEIGHT	MINIMUM PURITY	MINIMUM GERMINATION
KENTUCKY 31 TALL FESCUE	75%	95%	80%
RYEGRASS OR RED FESCUE	25%	95%	80%

THREE-PERCENT REDTOP MAY BE ADDED TO THE LAWN MIXTURE ON SLOPE AREAS OR FOR LATE SPRING OR LATE FALL SEEDINGS.

TEMPORARY SEEDING SHALL BE APPLIED AT THE RATE OF ONE (1) POUND PER THOUSAND (1,000) SQUARE FEET.

ALL AREAS TO BE SEEDED SHALL BE LOOSENED TO A DEPTH OF AT LEAST TWO INCHES BY MECHANICAL MEANS.

MULCH SEEDED AREAS IMMEDIATELY AFTER SEEDING.

LIMESTONE AND FERTILIZER SHALL BE APPLIED UNIFORMLY TO AREAS TO BE SEEDED, AND WORKED INTO THE SOIL TO A DEPTH OF 2".

LIMESTONE – PULV. AG.
LIMESTONE – 40 LBS./1000 S.F.
FERTILIZER – 10-10-10
FERTILIZER – 12.5 LBS./1000 S.F.

SEEDING – SEED ALL DISTURBED AREAS WITH THE TEMPORARY SEED MIXTURE. SEEDING SHALL OCCUR MARCH 15–JUNE 15 OR AUGUST 15– OCTOBER 15, UNLESS OTHERWISE DIRECTED BY THE ENGINEER. MULCH (HAY OR STRAW) SHALL BE APPLIED AT A RATE OF 3 TONS PER ACRE DURING THE NON-GERMINATING PERIOD OF OCTOBER 15–MARCH 15.

SEEDING NOTES: PERMANENT

ALL TOPSOIL SHALL BE LOOSENED TO A DEPTH OF AT LEAST 4". ALL OBJECTIONABLE MATERIAL LARGER THAN 2" SHALL BE REMOVED.

DUE TO THE NATURE OF THE SOILS AT THE SITE IT MAY BE NECESSARY TO IMPORT TOPSOIL WITH SUFFICIENT ORGANIC MATERIAL AND WATER CAPACITY TO SUSTAIN THE SPECIFIED SEED MIXTURE.

LIMESTONE AND FERTILIZER SHALL BE APPLIED UNIFORMLY TO AREAS TO BE SEEDED, AND WORKED INTO THE SOIL TO A DEPTH OF 6".

LIMESTONE – PULV. AG.
LIMESTONE – GREATER OF RATE DETERMINED BY SOIL TEST OR 6 TONS PER ACRE
FERTILIZER – 10-10-20 (NITROGEN SLOW RELEASE – PHOSPHATE – POTASH)
FERTILIZER – GREATER OF RATE DETERMINED BY SOIL TEST OR 1,000 LBS. PER ACRE

MULCH OF LONG STEM STRAW SHALL BE APPLIED AT EVEN APPLICATION OF 3 TONS PER ACRE WITH A SURFACE COVERAGE OF 80–90%.

SEED MIXTURES

1) TYPE SM – FOR AREAS OF 3:1 SLOPE AND STEEPER

2) TYPE WS 1 – FOR AREAS FLATTER THAN 3:1 SLOPE

SEEDING NOTES: PERMANENT (CONTINUED)

TYPE SM SEED MIXTURE	MAXIMUM WEED SEED PERCENT	MINIMUM QUANTITY PURE LIVE SEED LBS./ACRE
ORCHARDGRASS, DACTYLIS GLOMERATA (AXIOM, ABLE, BENCHMARK, DAWN, HALLMARK, HAYMATE, POTOMAC, RANCHO OR STERLING)	0.25	20
WEEPING LOVEGRASS, ERAGROSTIS CURVULA (COMMON)	0.25	6
PERENNIAL RYEGRASS, LOLIUM PERENNE (COMMON)	0.50	20
BIRDSFOOT TREFOIL, LOTUS CORNICULATUS (DAWN, EMPIRE, VIKING, FERGUS, NORCEN OR TRETANA)	0.25	10
FIELD BROMEGRASS, BROMUS ARVENSIS (COMMON)	0.25	14
–OR–		
SMOOTH BROMEGRASS, BROMUS INERMIS (VNS)	0.25	14
SPRING OATS (BLAZE, ARMOR, HERCULES, PORTER OR VNS)	0.25	10
–OR–		
WINTER WHEAT (TYLER, DYNASTY, FREEDOM, MADISON OR VNS)	0.25	10
–OR–		
WINTER RYE (COMMON OR VNS)	0.25	10
TOTAL POUNDS PER ACRE		60

TYPE WS 1 SEED MIXTURE	MAXIMUM WEED SEED PERCENT	MINIMUM QUANTITY PURE LIVE SEED LBS./ ACRE
BIG BLUESTEM, ANDROPOGON GERARDII (PAWNEE, KAW, CHAMP, NIAGARA OR ROUNDTREE)	2	10
LITTLE BLUESTEM, SCHIZACHYRIUM SCOPARIUM (ALDOUS, BLAZE CAMPER OR CIMARRON)	2	8
SAND DROPSEED, SPOROBOLUS CRYPTANDRUS (COMMON OR VNS)	2	0.1
REDTOP, AGROSTIS GIGANTEAN ROTH (COMMON OR VNS)	0.25	5
WHITE DUTCH CLOVER, TRIFOLIUM REPENS (COMMON OR VNS)	0.25	5
SPRING OATS (BLAZE, ARMOR, HERCULES, PORTER OR VNS)	0.25	25
–OR–		
WINTER WHEAT (TYLER, DYNASTY, FREEDOM, MADISON OR VNS)	0.25	25
–OR–		
WINTER RYE (COMMON OR VNS)	0.25	25
TOTAL POUNDS PER ACRE		53.1

THE QUANTITY OF SEED WILL BE DETERMINED BY CALCULATING THE PERCENT OF PURE LIVE SEED (PLS). PLS IS DETERMINED BY MULTIPLYING THE MINIMUM PURITY PERCENT BY THE MINIMUM GERMINATION PERCENT AND DIVIDING BY 100.

SUBJECT TO THE APPROVAL OF THE ENGINEER, THE CONTRACTOR MAY ADD OTHER GRASS SEEDS TO THE TYPE SM AND TYPE WS1 SEED MIXTURES TO SECURE A COVER CROP, BUT NO ADDITIONAL PAYMENT WILL BE MADE THEREFORE.

NO SEED SHALL CONTAIN ANY OF THE FOLLOWING NOXIOUS WEED SEEDS: CANADA THISTLE, FIELD BINDWEED, JOHNSON GRASS, PERENNIAL PEPPERGRASS, PERENNIAL SOW THISTLE, QUACK GRASS, HORSE NETTLE, BEDSTRAW, CORN COCKLE, BRASSICA KABER, BRASSICA NIGRA, WILD ONION OR WILD GARLIC.

ALL SEED SHALL CONFORM TO THE PENNSYLVANIA SEED ACT OF 1965, ACT NO. 187, AS AMENDED, AND REGULATIONS OF THE PENNSYLVANIA DEPARTMENT OF AGRICULTURE, BUREAU OF PLANT INDUSTRY.

CERTIFICATION OF PURITY AND GERMINATION ANALYSIS MUST BE SUPPLIED UNDER THE CURRENT RULES FOR TESTING SEEDS OF THE ASSOCIATION OF OFFICIAL SEED ANALYSTS BY THE COMMONWEALTH OF PENNSYLVANIA, DEPARTMENT OF AGRICULTURE, BUREAU OF PLANT INDUSTRY.

ALL SEED FURNISHED SHALL BE FULLY TAGGED AND DELIVERED BY INDIVIDUAL VARIETIES, SEPARATELY PACKAGED OR BAGGED. ALL PRE-MIXED SEED SHALL HAVE AN INSPECTION TAG, STAMPED, DATED AND SIGNED BY THE DEPARTMENT INSPECTOR, SEWN INTO THE INSIDE TOP OF EACH BAG. NO SEED SHALL BE UTILIZED WHICH HAS A MIX DATE OLDER THAN NINE (9) MONTHS. NO SEED SHALL BE USED ON ANY PROJECT UNLESS IT HAS BEEN INSPECTED AND SAMPLED AS DESCRIBED, OR SAMPLED BY INDIVIDUAL SPECIES AND MIXED ON THE PROJECT SITE UNDER DEPARTMENT SUPERVISION.

THE SEED FURNISHED SHALL NOT BE MORE THAN TWO (2) YEARS OLD AND SHALL HAVE BEEN TESTED FOR GERMINATION NOT MORE THAN SIX (6) MONTHS PRIOR TO SEEDING OPERATIONS. A CERTIFICATE OF TEST RESULTS SHALL BE FURNISHED TO THE RESIDENT ENGINEER BEFORE APPROVAL FOR USE OF THE SEED IS GIVEN.

SEED, WHICH HAS BECOME WET, MOLDY OR OTHERWISE DAMAGED IN TRANSIT OR STORAGE, WILL NOT BE ACCEPTED.

INOCULANT

THE INOCULANT FOR TREATING LEGUMINOUS SEED SHALL BE A STANDARD COMMERCIAL PRODUCT CONSISTING OF A SUITABLE CARRIER, CONTAINING A CULTURE OF NITROGEN-FIXING BACTERIA SPECIFICALLY FOR THE SEED TO BE INOCULATED. ALL CONTAINERS MUST REMAIN SEALED UNTIL CONTENTS ARE USED IN THEIR ENTIRETY. INOCULANT SHALL NOT BE USED AFTER THE EXPIRATION DATE INDICATED ON THE CONTAINER.

SUITABLE STORAGE IN A MODERATE TEMPERATURE SHALL BE PROVIDED AT ALL TIMES. ALL INOCULANT SHALL BE SUBJECT TO APPROVAL OF THE RESIDENT ENGINEER.

ALL LEGUMINOUS SEED WITH THE EXCEPTION OF THE BLACK LOCUST TREE SEED SHALL BE INOCULATED OR TREATED WITH AN APPROVED CULTURE AS RECOMMENDED BY THE SUPPLIER. THE SEED SHALL THEN BE SOWN WITHIN TWENTY-FOUR (24) HOURS AFTER TREATMENT. IF SEED IS TO BE APPLIED BY HYDRAULIC SEEDERS, FOUR (4) TIMES THE MANUFACTURER'S RECOMMENDED AMOUNT OF INOCULANT SHALL BE USED. INOCULANT MUST BE KEPT AT TEMPERATURES BELOW 75' F.

THE INOCULANT SHALL BE VIABLE AND MADE UP OF SEVERAL BACTERIAL STRAINS WHICH ARE SPECIFIED FOR THE LEGUME GROUP TO BE INOCULATED. INOCULANT SHALL NOT BE USED LATER THAN THE DATE INDICATED ON THE CONTAINER OR SPECIFIED BY THE SUPPLIER.

RESPONSIBILITIES FOR FILL MATERIALS INCLUDING DEFINITION OF ENVIRONMENTAL DUE DILIGENCE & CLEAN FILL

IF THE SITE WILL NEED TO HAVE FILL IMPORTED FROM AN OFF SITE LOCATION, THE RESPONSIBILITY FOR PERFORMING ENVIRONMENTAL DUE DILIGENCE AND THE DETERMINATION OF CLEAN FILL WILL IN MOST CASES RESIDE WITH THE OPERATOR. IF THE SITE WILL HAVE EXCESS FILL THAT WILL NEED TO BE EXPORTED TO AN OFF SITE LOCATION, THE RESPONSIBILITY OF CLEAN FILL DETERMINATION AND ENVIRONMENTAL DUE DILIGENCE RESTS ON THE APPLICANT.

APPLICANTS AND/OR OPERATORS MUST USE ENVIRONMENTAL DUE DILIGENCE TO ENSURE THAT THE FILL MATERIAL ASSOCIATED WITH THIS PROJECT QUALIFIES AS CLEAN FILL. DEFINITIONS OF CLEAN FILL AND ENVIRONMENTAL DUE DILIGENCE ARE PROVIDED BELOW. ALL FILL MATERIAL MUST BE USED IN ACCORDANCE WITH THE DEPARTMENT'S POLICY "MANAGEMENT OF FILL", DOCUMENT NUMBER 258-2182-773. A COPY OF THIS POLICY IS AVAILABLE ONLINE AT WWW.DEPWEB.STATE.PA.US. UNDER THE HEADING QUICK ACCESS ON THE LEFT SIDE OF THE SCREEN, CLICK ON "FORMS AND PUBLICATIONS." ON THE LEFT SIDE OF THE SCREEN CLICK ON "TECHNICAL GUIDANCE DOCUMENTS – FINAL" THEN TYPE THE DOCUMENT NUMBER 258-2182-773 INTO THE SEARCH WINDOW AND CONDUCT THE SEARCH. CLICK ON "MANAGEMENT OF FILL."

CLEAN FILL IS DEFINED AS: UNCONTAMINATED, NON-WATER SOLUBLE, NON-DECOMPOSABLE, INERT, SOLID MATERIAL. THE TERM INCLUDES SOIL, ROCK, STONE, DREDGED MATERIAL, USED ASPHALT, AND BRICK, BLOCK OR CONCRETE FROM CONSTRUCTION AND DEMOLITION ACTIVITIES THAT IS SEPARATE FROM OTHER WASTE AND IS RECOGNIZABLE AS SUCH. THE TERM DOES NOT INCLUDE MATERIALS PLACED IN OR ON THE WATERS OF THE COMMONWEALTH UNLESS OTHERWISE AUTHORIZED. (THE TERM "USED ASPHALT" DOES NOT INCLUDE MILLED ASPHALT OR ASPHALT THAT HAS BEEN PROCESSED FOR RE-USE.)

CLEAN FILL AFFECTED BY A SPILL OR RELEASE OF A REGULATED SUBSTANCE: FILL MATERIALS AFFECTED BY A SPILL OR RELEASE OF A REGULATED SUBSTANCE STILL QUALIFIES AS CLEAN FILL PROVIDED THE TESTING REVEALS THAT THE FILL MATERIAL CONTAINS CONCENTRATIONS OF REGULATED SUBSTANCES THAT ARE BELOW THE RESIDENTIAL LIMITS IN TABLES FP-1A AND FP-1B FOUND IN THE DEPARTMENT'S POLICY "MANAGEMENT OF FILL".

ANY PERSON PLACING CLEAN FILL THAT HAS BEEN AFFECTED BY A SPILL OR RELEASE OF A REGULATED SUBSTANCE MUST USE FORM FP-001 TO CERTIFY THE ORIGIN OF THE FILL MATERIAL AND THE RESULTS OF THE ANALYTICAL TESTING TO QUALIFY THE MATERIAL AS CLEAN FILL. FORM FP-001 MUST BE RETAINED BY THE OWNER OF THE PROPERTY RECEIVING THE FILL. A COPY OF FORM FP-001 CAN BE FOUND AT THE END OF THESE INSTRUCTIONS.

ENVIRONMENTAL DUE DILIGENCE: INVESTIGATIVE TECHNIQUES, INCLUDING, BUT NOT LIMITED TO, VISUAL PROPERTY INSPECTIONS, ELECTRONIC DATA BASE SEARCHES, REVIEW OF PROPERTY OWNERSHIP, REVIEW OF PROPERTY USE HISTORY, SANBORN MAPS, ENVIRONMENTAL QUESTIONNAIRES, TRANSACTION SCREENS, ANALYTICAL TESTING, ENVIRONMENTAL ASSESSMENTS OR AUDITS. ANALYTICAL TESTING IS NOT A REQUIRED PART OF DUE DILIGENCE UNLESS VISUAL INSPECTION AND/OR REVIEW OF THE PAST LAND USE OF THE PROPERTY INDICATES THAT THE FILL MAY HAVE BEEN SUBJECTED TO A SPILL OR RELEASE OF REGULATED SUBSTANCE.

FILL MATERIAL THAT DOES NOT QUALIFY AS CLEAN FILL IS REGULATED FILL. REGULATED FILL IS WASTE AND MUST BE MANAGED IN ACCORDANCE WITH THE DEPARTMENT'S MUNICIPAL OR RESIDUAL WASTE REGULATIONS BASED ON 25 PA. CODE CHAPTERS 287 RESIDUAL WASTE MANAGEMENT OR 271 MUNICIPAL WASTE MANAGEMENT, WHICHEVER IS APPLICABLE.

CONSTRUCTION SEQUENCE

1. AT LEAST SEVEN DAYS BEFORE STARTING ANY EARTH DISTURBANCE ACTIVITIES, THE OPERATOR SHALL INVITE ALL CONTRACTORS INVOLVED IN THOSE ACTIVITIES, THE LANDOWNER, ALL APPROPRIATE MUNICIPAL OFFICIALS, THE EROSION AND SEDIMENT CONTROL PLAN PREPARER, AND THE SCHUYLKILL CONSERVATION DISTRICT TO AN ON-SITE MEETING. ALSO, AT LEAST THREE DAYS BEFORE STARTING ANY EARTH DISTURBANCE ACTIVITIES, ALL CONTRACTORS INVOLVED IN THOSE ACTIVITIES SHALL NOTIFY THE PA ONE CALL SYSTEM AT 1-800-242-1776 FOR BURIED UTILITIES LOCATIONS.
2. ALL EARTH DISTURBANCE ACTIVITIES SHALL PROCEED IN ACCORDANCE WITH THE FOLLOWING SEQUENCE. EACH STAGE SHALL BE COMPLETED BEFORE ANY FOLLOWING STAGE IS INITIATED. CLEARING AND GRUBBING SHALL BE LIMITED ONLY TO THOSE AREAS DESCRIBED IN EACH STAGE.
3. INSTALL ROCK CONSTRUCTION ENTRANCE AT LOCATION WHERE CONSTRUCTION VEHICLES WILL BE ENTERING AND LEAVING THE SITE. ALL VEHICLES ENTERING THE SITE SHALL DO SO VIA THE ROCK CONSTRUCTION ENTRANCE. CONTRACTOR SHALL NOT TRACK MUD OR SEDIMENT ONTO ANY PAVED AREAS OR PUBLIC ROADS. ANY MUD OR SEDIMENT TRACKED ONTO ROADWAYS SHALL BE REMOVED BY THE CONTRACTOR AT THE END OF EACH WORKING DAY. WASHING OF THE ROADWAY IS NOT PERMITTED.
4. INSTALL SILT FENCE THROUGHOUT THE ENTIRE SITE AS INDICATED ON THE EROSION AND SEDIMENTATION CONTROL PLAN.
5. INSTALL THE BROAD BASED DIP WITH ROCK FILTER AS INDICATED TO DIVERT STORM FLOWS FROM THE CONSTRUCTION ENTRANCE TO THE STREAM.
6. ESTABLISH THE CONSTRUCTION STAGING AREA AS INDICATED.

INTAKE STRUCTURE (AT BOREHOLE DISCHARGE) AND PIPELINE CONSTRUCTION (ALONG SANDERSON STREET)
(THIS STAGE OF CONSTRUCTION MAY BE COMPLETED AT ANYTIME DURING A DRY PERIOD)

A. CONTACT UTILITY COMPANY AS NEEDED TO RELOCATE THE GUY WIRE LOCATED NEAR THE INTAKE STRUCTURE.
B. ESTABLISH NECESSARY TRAFFIC CONTROL DEVICES FOR WORK ALONG SANDERSON STREET.
C. INSTALL ROCK CONSTRUCTION ENTRANCE AND SILT FENCE ALONG SANDERSON STREET AS INDICATED.
D. SETUP THE BY-PASS PUMP AT THE INTAKE STRUCTURE LOCATION WITH THE PUMP DISCHARGE LOCATED IN A STABLE AREA OF THE EXISTING CHANNEL DOWNSTREAM OF THE WORK AREA AND BEGIN PUMPING THE DISCHARGE AROUND THE WORK AREA.
E. INSTALL THE TEMPORARY DAM AND THE DOWNSTREAM IN-CHANNEL ROCK FILTER AT THE INTAKE STRUCTURE LOCATION.
F. INSTALL THE INTAKE STRUCTURE AND 12" PIPELINE DOWNSTREAM TO INCLUDE THE GATE VALVE. THE GATE VALVE SHOULD BE MAINTAINED IN THE CLOSED POSITION UNTIL PROJECT CONSTRUCTION IS COMPLETE AND THE OWNER HAS BEEN NOTIFIED.
G. INSTALL THE BERM ON THE NORTHWEST SIDE OF THE DISCHARGE CHANNEL AS INDICATED TO PREVENT DISCHARGE FLOW FROM LEAVING THE CHANNEL AND BY-PASSING THE INTAKE STRUCTURE.
H. BACK FILL AND STABILIZE THE AREA, ALL AREAS MUST BE STABILIZED BEFORE BMPs ARE REMOVED. A CLAY DIKE SHALL BE INSTALLED BETWEEN THE INTAKE STRUCTURE AND THE GATE VALVE TO PREVENT SEEPAGE ALONG THE PIPE. THE STREAM BOTTOM AND BANKS SHALL RECEIVE R-4 RIPRAP FIVE (5) FOOT UPSTREAM AND TEN (10) FOOT DOWNSTREAM FROM THE INTAKE STRUCTURE.
I. REMOVE THE IN-CHANNEL ROCK FILTER OUTLET AND THE TEMPORARY DAM AT THE INTAKE STRUCTURE LOCATION.
J. DISCONTINUE BY-PASS PUMPING.
K. STABILIZE ANY REMAINING AREAS AROUND THE INTAKE STRUCTURE, ALL AREAS MUST BE STABILIZED BEFORE BMPs ARE REMOVED.
L. PROCEED WITH INSTALLATION OF THE 12" INTAKE PIPELINE WORKING DOWNSTREAM. BY-PASS AS NEEDED THE THREE (3) SWALES/CULVERTS ALONG SANDERSON STREET. ANY DISTURBED PAVED AREAS SHALL BE RESTORED WITH TEMPORARY PAVING AT THE END OF EACH WORK DAY, AND VEGETATED AREAS SHALL BE RESTORED, PERMANENTLY SEEDED, MULCHED, AND STABILIZED AT THE END OF EACH WORK DAY.
M. COORDINATE WITH THE TOWNSHIP WHEN CROSSING OF VALLEY ROAD WILL OCCUR.
N. ESTABLISH NECESSARY TRAFFIC CONTROL DEVICES FOR WORK AT THE SANDERSON STREET / VALLEY ROAD INTERSECTION.
O. PROCEED EXPEDITOUSLY WITH THE 12" INTAKE PIPELINE INSTALLATION WITHIN THE ROADWAY. RESTORE ANY DISTURBED PAVED AREAS WITH TEMPORARY PAVING AT THE END OF EACH WORK DAY.
P. COORDINATE WITH THE SCHUYLKILL VALLEY SEWER AUTHORITY WHEN CROSSING OF THE SANITARY SEWER LINE WILL OCCUR.
Q. INSTALL THE 12" INTAKE PIPELINE WHERE IT CROSSES THE SANITARY SEWER LINE AND UP TO THE STREAM CROSSING WITH CONCRETE ENCASEMENT AS INDICATED.
R. SETUP THE BY-PASS PUMP AT THE STREAM CROSSING LOCATION WITH THE PUMP DISCHARGE LOCATED IN A STABLE AREA OF THE EXISTING CHANNEL DOWNSTREAM OF THE WORK AREA AND BEGIN PUMPING THE DISCHARGE AROUND THE WORK AREA.
S. INSTALL THE TEMPORARY DAM AND THE DOWNSTREAM IN-CHANNEL ROCK FILTER AT THE STREAM CROSSING LOCATION.
T. INSTALL THE 12" INTAKE PIPELINE WITH CONCRETE ENCASEMENT STREAM CROSSING AND REMOVE ACCUMULATED SEDIMENT FROM THE EXISTING CHANNEL WITHIN THE LIMITS INDICATED.
U. BACK FILL AND STABILIZE THE AREA, ALL AREAS MUST BE STABILIZED BEFORE BMPs ARE REMOVED. A CLAY DIKE SHALL BE INSTALLED BETWEEN THE STREAM AND THE TREATMENT AREA TO PREVENT SEEPAGE ALONG THE PIPE. THE STREAM BOTTOM AND BANKS SHALL RECEIVE R-4 RIPRAP TEN (10) FOOT UPSTREAM AND TEN (10) FOOT DOWNSTREAM FROM THE PIPELINE CROSSING.
V. REMOVE THE IN-CHANNEL ROCK FILTER OUTLET AND THE TEMPORARY DAM AT THE STREAM CROSSING LOCATION.
W. DISCONTINUE BY-PASS PUMPING.
X. STABILIZE ANY REMAINING AREAS AROUND THE STREAM CROSSING, ALL AREAS MUST BE STABILIZED BEFORE BMPs ARE REMOVED.
Y. INSTALL THE REMAINDER OF THE 12" INTAKE PIPELINE. IF GRADING OF THE SETTLING POND HAS BEEN COMPLETED, INSTALL THE INFLUENT DISTRIBUTION HEADER AND LATERALS AS INDICATED, IF NOT MARK THE END OF THE PIPE FOR FUTURE DAY-LIGHTING AND INSTALLATION OF THE INFLUENT DISTRIBUTION HEADER AND LATERALS.
Z. ANY REMAINING DISTURBED PAVED AREAS SHALL BE RESTORED WITH TEMPORARY PAVING, AND REMAINING VEGETATED AREAS SHALL BE RESTORED, PERMANENTLY SEEDED, MULCHED, AND STABILIZED.
AA. AFTER A MINIMUM OF 60 DAYS SINCE THE LAST DISTURBANCE RESTORE THE TEMPORARY PAVED AREAS WITH PERMANENT PAVEMENT AS INDICATED.

TREATMENT AREA CONSTRUCTION

A. INSTALL THE ROCK FILTER OUTLET NEAR THE FLUSH POND EMERGENCY SPILLWAY AND THE 18" TEMPORARY CULVERT PIPE AS INDICATED.
B. CLEAR AND GRUB IN THE AREA OF TEMPORARY SEDIMENT TRAP #1 (FUTURE FLUSH MAINTAINED WETLANDS/POND) AS INDICATED ON THE PLANS. CONSTRUCT THE POND DRAIN WITH ALL WEIR PLATES IN THE AGRI-DRAIN STRUCTURE, CLAY CORE BERM, AND EMBANKMENT SPILLWAY. THE EMBANKMENT SPILLWAY SHALL BE PLACED IN THE AREA OF THE PERMANENT EMERGENCY SPILLWAY. LARGE TREES WITHIN THE SCHUYLKILL RIVER FLOODWAY SHALL BE PRESERVED WHERE FEASIBLE. THE CONTRACTOR SHALL ENSURE THE SEDIMENT TRAP IS STABILIZED (SEEDED AND MULCHED) AND FUNCTIONING PROPERLY PRIOR TO ANY FURTHER EARTH DISTURBANCE ACTIVITIES. CONTRACTOR SHALL CONTACT THE SCHUYLKILL CONSERVATION DISTRICT TO INFORM THEM THE SEDIMENT TRAP HAS BEEN COMPLETED.
C. CLEAR AND GRUB THE AREA FOR TEMPORARY SEDIMENT TRAP #2 (FUTURE MAINTAINED WETLAND CELL).
D. UTILIZE THE EXCAVATED MATERIAL FROM SEDIMENT TRAP #1 TO CONSTRUCT SEDIMENT TRAP #2. CONSTRUCT THE SEDIMENT TRAP CLAY CORE BERM, AND EMBANKMENT SPILLWAY. THE EMBANKMENT SPILLWAY SHALL BE PLACED IN THE AREA OF THE PERMANENT EMERGENCY SPILLWAY. LARGE TREES WITHIN THE FLOODWAY SHALL BE PRESERVED WHERE FEASIBLE. THE CONTRACTOR SHALL ENSURE THE SEDIMENT TRAP IS STABILIZED (SEEDED AND MULCHED) AND FUNCTIONING PROPERLY PRIOR TO ANY FURTHER EARTH DISTURBANCE ACTIVITIES. CONTRACTOR SHALL CONTACT THE SCHUYLKILL CONSERVATION DISTRICT TO INFORM THEM THE SEDIMENT TRAP HAS BEEN COMPLETED.
E. STOCKPILE TOPSOIL AT THE DESIGNATED LOCATIONS AND SURROUND WITH 18" SILT FENCE. SEED STOCKPILE AS PER TEMPORARY SEEDING SPECIFICATIONS. STRIPPED TOPSOIL SHALL BE STOCKPILED WITH SIDE SLOPES NO GREATER THAN 3:1. EXCAVATED MATERIAL SHALL NOT BE PLACED WITHIN 50 FEET OF A STREAM, WETLAND, OR OTHER WATERS OF COMMONWEALTH.
F. INSTALL GUIDERAIL ALONG VALLEY STREET AS INDICATED EXCEPT IN THE AREA BETWEEN THE MAINTAINED WETLAND CELL AND TREATMENT CELL FOR FUTURE ADDITION OF LIMESTONE TO THE TREATMENT CELL.
G. BEGIN GRADING FOR THE OUTFALL CHANNEL AND TREATMENT CELL. INSTALL THE TREATMENT CELL DRAIN/FLUSH PIPES UNDER THE OUTFALL CHANNEL AND THE DOWNSTREAM TREATMENT CELL BERM COMPLETE WITH RIPRAP APRONS AND ANTI-SEEP COLLARS. COMPLETE CONSTRUCTION OF THE OUTFALL CHANNEL WITH LIMESTONE RIPRAP STABILIZATION. THE TREATMENT CELL DRAIN/FLUSH PIPE VALVES SHALL BE LEFT OPEN TO DRAIN THE TREATMENT CELL EXCAVATION INTO SEDIMENT TRAP #1 (FUTURE FLUSH MAINTAINED WETLANDS/POND).
H. CONTINUE GRADING OF THE TREATMENT CELL. AS THE CONSTRUCTION OF THE DOWNSTREAM BERM OF THE TREATMENT CELL PROGRESSES STABILIZE THE BERM WITH LIMESTONE RIPRAP AS INDICATED.
I. ONCE THE OUTFALL CHANNEL HAS BEEN COMPLETED FROM THE 12" CULVERT PIPE TO THE SCHUYLKILL RIVER, THE 18" TEMPORARY DIVERSION PIPE MAY BE REMOVED SENDING ANY CULVERT DISCHARGE DOWN THE STABILIZED CHANNEL.
J. ONCE ROUGH GRADING HAS BEEN ACHIEVED, INSTALL THE TREATMENT CELL LINER WITH SEALED PENETRATIONS FOR THE DRAIN PIPES ON THE UP AND DOWNSTREAM SIDES OF THE BERM. PLACE THE PIPE BEDDING ON THE BOTTOM OF THE TREATMENT CELL AND INSTALL THE DISTRIBUTION PIPING.
K. INSTALL THE VERTICAL PIPING TO THE TRENCH DRAIN AND THE TRENCH DRAIN – TREATMENT CELL INFLUENT STRUCTURE AS INDICATED.
L. EXCAVATE AS NECESSARY FOR INSTALLATION OF THE SETTLING POND CLAY CORE BERMS, POND DRAIN PIPE AND APPURTENANCES. CONSTRUCT THE BERMS FOR THE SETTLING POND. DURING EXCAVATION ANY ACCUMULATED WATER WITHIN THE EXCAVATION SHALL BE PUMPED TO ONE OF THE TWO SEDIMENT TRAPS, AT NO TIME SHALL ACCUMULATED WATER BE PERMITTED TO LEAVE VIA THE DRAIN PIPE DIRECTLY TO THE STREAM. COMPLETE THE GRADING OPERATIONS FOR THE BOTTOM OF THE POND, AND APPLY STABILIZATION (SEEDED AND MULCH AS NEEDED).
M. COMPLETE CONSTRUCTION OF THE BERM BETWEEN THE MAINTAINED WETLAND CELL AND TREATMENT CELL INCLUDING THE TRENCH DRAIN.
N. FINAL GRADE, PERMANENTLY SEED, MULCH, AND STABILIZE AREAS AROUND THE SETTLING POND AND MAINTAINED WETLAND CELL WHICH WILL NOT BE REDISTURBED.
O. PRIOR TO SEDIMENT TRAP #2 DECOMMISSIONING, THE CONTRACTOR SHALL CONTACT THE SCD. CONVERT THE TEMPORARY SEDIMENT TRAP #2 INTO THE MAINTAINED WETLAND CELL BY FIRST DRAINING THE TRAP WITH A SEDIMENT TRAP DEWATERING DEVICE OR A PUMPED WATER FILTER BAG, REMOVING AND PROPERLY DISPOSING THE ACCUMULATED SEDIMENT. GRADE THE WETLAND CELL TO ITS FINAL GRADE AND PLACE THE WETLAND CELL SUBSTRATE AS INDICATED. REMOVE THE EMBANKMENT SPILLWAY AND INSTALL THE PERMANENT EMERGENCY SPILLWAY AS INDICATED. FINAL GRADE, PERMANENTLY SEED, MULCH, AND STABILIZE ANY REMAINING AREAS DISTURBED BY THE SEDIMENT TRAP DECOMMISSIONING.
P. FINAL GRADE, PERMANENTLY SEED, MULCH, AND STABILIZE AREAS AROUND THE TREATMENT CELL AND FLUSH POND WHICH WILL NOT BE REDISTURBED.
Q. ESTABLISH ROCK CONSTRUCTION ENTRANCE ALONG VALLEY STREET ON THE BERM BETWEEN THE MAINTAINED WETLAND CELL AND TREATMENT CELL FOR ADDITION OF LIMESTONE TO THE TREATMENT CELL.
R. BEGIN FILLING THE TREATMENT CELL WITH LIMESTONE AS SPECIFIED.
S. PRIOR TO SEDIMENT TRAP #1 DECOMMISSIONING, THE CONTRACTOR SHALL CONTACT THE SCD. CONVERT THE TEMPORARY SEDIMENT TRAP #1 INTO THE FLUSH MAINTAINED WETLANDS/POND BY FIRST DRAINING THE TRAP WITH A SEDIMENT TRAP DEWATERING DEVICE OR A PUMPED WATER FILTER BAG, REMOVING AND PROPERLY DISPOSING THE ACCUMULATED SEDIMENT. GRADE THE FLUSH MAINTAINED WETLANDS/POND TO ITS FINAL GRADE. REMOVE THE EMBANKMENT SPILLWAY AND INSTALL THE PERMANENT EMERGENCY SPILLWAY AS INDICATED. FINAL GRADE, PERMANENTLY SEED, MULCH, AND STABILIZE ANY REMAINING AREAS DISTURBED BY THE SEDIMENT TRAP DECOMMISSIONING.
T. FINISH FILLING THE TREATMENT CELL WITH LIMESTONE.
U. INSTALL REMAINDER OF GUIDERAIL ALONG VALLEY STREET AS INDICATED.

7. FINAL GRADE, PERMANENTLY SEED, MULCH, AND STABILIZE ANY REMAINING DISTURBED AREAS. AN AREA SHALL BE CONSIDERED TO HAVE ACHIEVED FINAL STABILIZATION WHEN IT HAS A MINIMUM UNIFORM 70% PERENNIAL VEGETATIVE COVER OR OTHER PERMANENT NON-VEGETATIVE COVER WITH A DENSITY SUFFICIENT TO RESIST ACCELERATED SURFACE EROSION AND SUBSURFACE CHARACTERISTICS SUFFICIENT TO SLIDING AND OTHER MOVEMENTS.
8. UPON SITE STABILIZATION AND CONSERVATION DISTRICT APPROVAL, REMOVE REMAINING EROSION CONTROL MEASURES. ANY AREAS DISTURBED BY REMOVAL OF CONTROLS SHALL BE IMMEDIATELY REPAIRED, STABILIZED AND PERMANENTLY SEEDED AS SHOWN ON THE EROSION AND SEDIMENTATION CONTROL PLAN.
9. UNTIL SUCH TIME AS THE SITE IS PERMANENTLY STABILIZED, ALL EROSION AND SEDIMENTATION CONTROLS MUST BE MAINTAINED IN WORKING ORDER. MAINTENANCE MUST INCLUDE INSPECTION OF ALL EROSION AND SEDIMENTATION CONTROLS AFTER EACH RUNOFF EVENT AND ON A WEEKLY BASIS.
10. ONCE ALL EROSION AND SEDIMENT CONTROLS HAVE BEEN REMOVED, WITH THE ENGINEER'S AND CONSERVATION DISTRICT'S APPROVAL, THE INFLUENT GATE VALVE CAN BE OPENED TO ALLOW THE ABANDONED MINE DRAINAGE TO ACTIVELY FILL THE SYSTEM. THE CLIENT, ENGINEER, AND CONSERVATION DISTRICT SHALL BE INVITED TO ATTEND THE OPENING OF THE REMEDIATION FACILITY.

PCSWM OPERATION AND MAINTENANCE SCHEDULE

1. THE PROPERTY OWNER SHALL OWN, MAINTAIN AND BE RESPONSIBLE FOR ALL STORM WATER MANAGEMENT AND PERMANENT BMP FACILITIES THAT ARE LOCATED OUTSIDE OF STREET RIGHT-OF-WAYS AS PROPOSED ON THIS POST CONSTRUCTION STORM WATER MANAGEMENT PLAN.
2. THE OWNER SHALL CONDUCT A VISUAL INSPECTION OF ALL STORM WATER MANAGEMENT AND PERMANENT BMP FACILITIES AT LEAST ONCE EVERY THREE MONTHS AND IMMEDIATELY AFTER STORM EVENTS. SUCH VISUAL EXAMINATION SHALL AT LEAST INVOLVE AN EXAMINATION OF THE STORM WATER COLLECTION, CONVEYANCE AND DETENTION/BMP FACILITIES FOR DEBRIS DEPOSITION (SUCH DEBRIS MAY INCLUDE, BUT SHALL NOT BE LIMITED TO AGGREGATE MATERIAL, LEAVES, GRASS CLIPPINGS, SOIL AND TRASH), AND AN EXAMINATION OF THE STORM WATER DETENTION/BMP FACILITY FOR SOIL AND STRUCTURAL SETTLEMENT, DEPRESSIONS, SINKHOLES, SEEPS, STRUCTURAL CRACKING, ANIMAL BURROWS, EXCESSIVE VEGETATION, CLOGGING, EROSION AND FOUNDATION MOVEMENT.
3. THE OWNER SHALL REMOVE ANY ACCUMULATION OF DEBRIS AND REPAIR ANY DAMAGE TO THE STORM WATER MANAGEMENT AND PERMANENT BMP FACILITIES. REPAIRS SHALL BE MADE USING MATERIAL THAT MEETS OR EXCEEDS THE SPECIFICATIONS PROVIDED ON THE PLANS.
4. IN ACCORDANCE WITH THE NPDES PERMIT, THE OWNER IS REQUIRED TO MAINTAIN A RECORD OF ALL INSPECTIONS, REPAIRS AND MAINTENANCE ACTIVITIES ASSOCIATED WITH THE STORM WATER MANAGEMENT AND PERMANENT BMP FACILITIES AT THIS PROJECT SITE. THE OWNER SHALL IMMEDIATELY NOTIFY THE MUNICIPALITY AND THE CONSERVATION DISTRICT PRIOR TO INITIATING ANY MAJOR REPAIR ACTIVITIES (SUCH AS REPAIRS THAT MAY BE REQUIRED AS A RESULT OF SETTLEMENT, SINKHOLES, SEEPS, STRUCTURAL CRACKING OR FOUNDATION MOVEMENT).
5. THE OWNER SHALL ALSO COMPLY WITH ANY OTHER MAINTENANCE NOTES THAT MAY BE ON THESE PLANS.

NO.	DATE	REVISION
3	9/14/12	CHANGE ORDER #1 SCOPE REDUCTION
2	6/25/12	MINOR REVISIONS FOR BIDDING
1	9/27/11	REVISED PER SCD COMMENTS DATED 9/7/11

FOR RETTEW ASSOCIATES BY:

COMMONWEALTH OF PENNSYLVANIA – REGISTERED PROFESSIONAL ENGINEER – CHRISTINE HALDEMAN – PE073813

XREFS: 04-03883-001-TB, 06-03883-002-T01

MANAGER: CHARLES MYERS, P.E.
DESIGN BY: | CHKD BY: CH
SURV. CHIEF: R. ORNER | FIELDBOOK NO. DATA COLLECTOR
DRAWN BY: | CHKD BY: CLM
DRAWING REFERENCE: N:\08\08-04234-008\CAD\CE\CDW\08-04234-008-08 Details.dwg

CLIENT
SCHUYLKILL HEADWATERS ASSOCIATION, INC.
P.O. BOX 1385
POTTSVILLE, PA 17901
PHONE: 570-385-2122

SCALE: NO SCALE

RETTEW
RETTEW Associates, Inc.
950 E. Main Street, Suite # 220
Schuylkill Haven, PA 17972
Phone (570) 385-2270 · Fax (570) 385-2217
Email: rettew@rettew.com Website: www.rettew.com
Engineers • Planners • Surveyors • Landscape Architects
Environmental Consultants

ABANDONED MINE DRAINAGE REMEDIATION
FOR THE
MARY D BOREHOLE
E&S NOTES
SCHUYLKILL TOWNSHIP SCHUYLKILL COUNTY, PA

DATE: AUG. 11, 2011
SHEET NO. 11 OF 13
DWG. NO. 08-04234-008

CONSTRUCTION SEQUENCE FOR STREAM CROSSINGS

1. INSTALL ALL E & S FACILITIES IN AREAS ADJACENT TO STREAM CROSSING INCLUDING SILT FENCE, TEMPORARY DEWATER FACILITIES, ETC.
2. SETUP THE BY-PASS PUMP AT THE INTAKE STRUCTURE LOCATION WITH THE PUMP DISCHARGE LOCATED IN A STABLE AREA OF THE EXISTING CHANNEL DOWNSTREAM OF THE WORK AREA AND BEGIN PUMPING THE DISCHARGE AROUND THE WORK AREA.
3. INSTALL THE TEMPORARY DAM AND THE DOWNSTREAM IN-CHANNEL ROCK FILTER AT THE INTAKE STRUCTURE LOCATION.
4. INSTALL THE 12" INTAKE PIPELINE WITH CONCRETE ENCASEMENT STREAM CROSSING AND REMOVE ACCUMULATED SEDIMENT FROM THE EXISTING CHANNEL WITHIN THE LIMITS INDICATED.
5. BACK FILL AND STABILIZE THE AREA. A CLAY DIKE SHALL BE INSTALLED BETWEEN THE STREAM AND THE TREATMENT AREA TO PREVENT SEEPAGE ALONG THE PIPE. THE STREAM BOTTOM AND BANKS SHALL RECEIVE R-4 RIPRAP TEN (10) FOOT UPSTREAM AND TEN (10) FOOT DOWNSTREAM FROM THE PIPELINE CROSSING.
6. REMOVE THE IN-CHANNEL ROCK FILTER OUTLET AND THE TEMPORARY DAM.
7. DISCONTINUE BY-PASS PUMPING.
8. STABILIZE ANY REMAINING AREAS AROUND THE STREAM CROSSING.

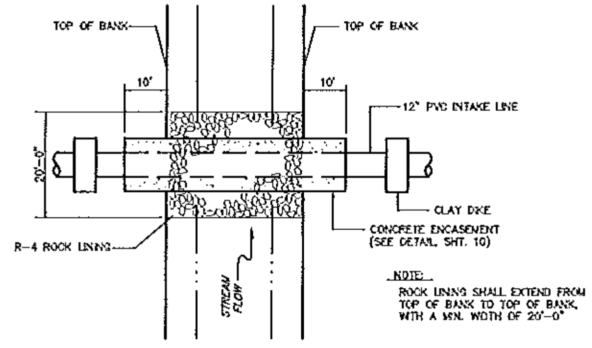

NOTE:
ROCK LINING SHALL EXTEND FROM TOP OF BANK TO TOP OF BANK, WITH A MIN. WIDTH OF 20'-0"

PLAN

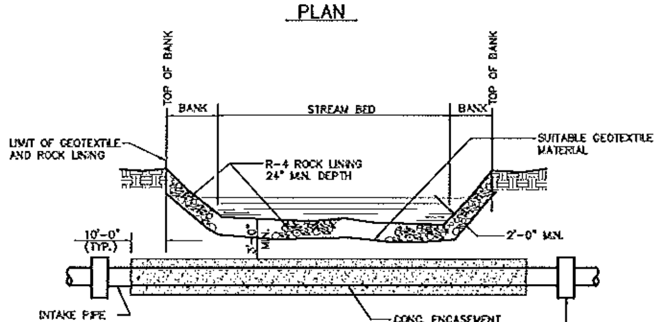

SECTION

STREAM CROSSING

NOT TO SCALE

CONSTRUCTION SEQUENCE FOR INTAKE STRUCTURE

1. INSTALL ALL E & S FACILITIES IN AREAS ADJACENT TO STREAM CROSSING INCLUDING SILT FENCE, TEMPORARY DEWATER FACILITIES, ETC.
2. SETUP THE BY-PASS PUMP AT THE INTAKE STRUCTURE LOCATION WITH THE PUMP DISCHARGE LOCATED IN A STABLE AREA OF THE EXISTING CHANNEL DOWNSTREAM OF THE WORK AREA AND BEGIN PUMPING THE DISCHARGE AROUND THE WORK AREA.
3. INSTALL THE TEMPORARY DAM AND THE DOWNSTREAM IN-CHANNEL ROCK FILTER AT THE INTAKE STRUCTURE LOCATION.
4. INSTALL THE INTAKE STRUCTURE AND 12" PIPELINE DOWNSTREAM TO INCLUDE THE GATE VALVE. THE GATE VALVE SHOULD BE MAINTAINED IN THE CLOSED POSITION UNTIL PROJECT CONSTRUCTION IS COMPLETE AND THE OWNER HAS BEEN NOTIFIED.
5. INSTALL THE BERM ON THE NORTHWEST SIDE OF THE DISCHARGE CHANNEL AS INDICATED TO PREVENT DISCHARGE FLOW FROM LEAVING THE CHANNEL AND BY-PASSING THE INTAKE STRUCTURE.
6. BACK FILL AND STABILIZE THE AREA. A CLAY DIKE SHALL BE INSTALLED BETWEEN THE INTAKE STRUCTURE AND THE GATE VALVE TO PREVENT SEEPAGE ALONG THE PIPE. THE STREAM BOTTOM AND BANKS SHALL RECEIVE R-4 RIPRAP FIVE (5) FOOT UPSTREAM AND TEN (10) FOOT DOWNSTREAM FROM THE INTAKE STRUCTURE.
7. REMOVE THE IN-CHANNEL ROCK FILTER OUTLET AND THE TEMPORARY DAM AT THE INTAKE STRUCTURE LOCATION.
8. DISCONTINUE BY-PASS PUMPING.
9. STABILIZE ANY REMAINING AREAS AROUND THE INTAKE STRUCTURE.

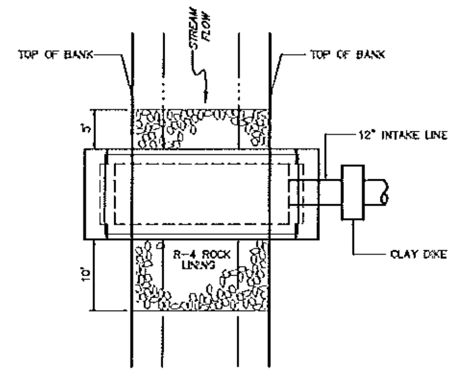

PLAN

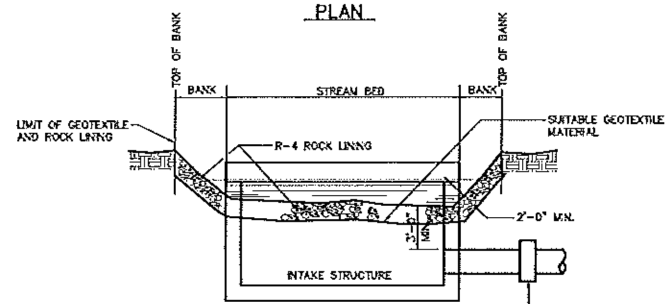

SECTION

INTAKE STRUCTURE RESTORATION DETAIL

NOT TO SCALE

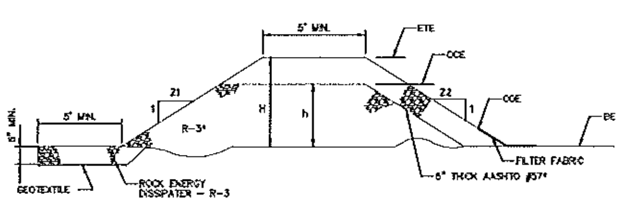

SECTION THROUGH SPILLWAY*

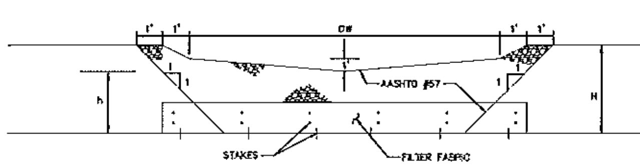

INSIDE FACE

TRAP NO.	Z1 (FT)	H (FT)	h (FT)	Z2 (FT)	EMBANK. TOP ELEV. ETE (FT)	OUTLET CREST ELEV. OCE (FT)	CLEAN OUT ELEV. COE (FT)	BOTTOM ELEV. BE (FT)	OUTLET WIDTH OW (FT)
1	2	3	2	2	784	783	781	781	10
2	2	4	1	2	797	795	794	793	13

* EMBANKMENT OUTLET COMPOSED ENTIRELY OF ROCK; MAIN BODY R-3 OR LARGER, INSIDE FACE ASSHTO #57 STONE OR SMALLER.

CLEAN OUT STAKE SHALL BE PLACED NEAR CENTER OF EACH TRAP. ACCUMULATED SEDIMENT SHALL BE REMOVED WHEN IT REACHES THE CLEAN OUT ELVEATION MARKED ON THE STAKE.

EMBANKMENT SEDIMENT TRAPS

NOT TO SCALE

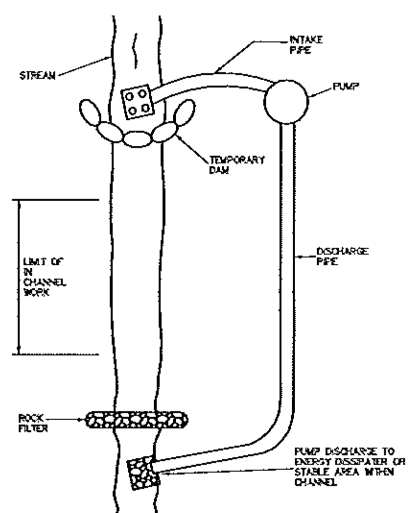

TEMPORARY COFFERDAM AND PUMP BYPASS AROUND IN-CHANNEL WORK AREA

NOT TO SCALE
ES/ES021

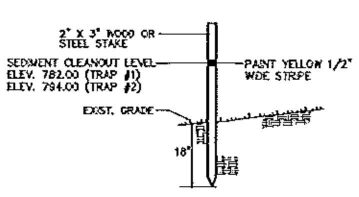

NOTE:
CLEANOUT STAKES MUST BE PLACED AT HALF DISTANCE FROM POINTS OF CONCENTRATED INFLOWS TO TEMPORARY RISER. WHEN SEDIMENT HAS ACCUMULATED TO CLEAN OUT ELEVATIONS ON ANY STAKE, IT MUST BE REMOVED TO RESTORE BASIN CAPACITES.

CLEANOUT STAKE

NOT TO SCALE

30 TO 55 GALLON BARREL
1" # PERFORATIONS AT 6" HORIZONTAL AND 6" VERTICAL SPACING
2" x 2" VERTICAL WOOD SLATS @ 6" HORIZONTAL SPACING AROUND THE BARREL
FILTER FABRIC AROUND THE BARREL AND SLATS

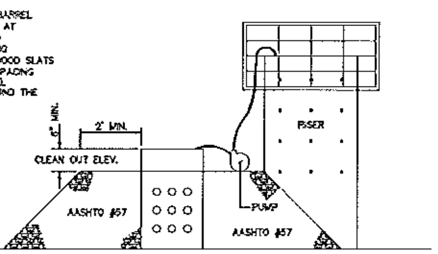

SEDIMENT BASIN OR SEDIMENT TRAP SEDIMENT STORAGE DEWATERING FACILITY

NOT TO SCALE

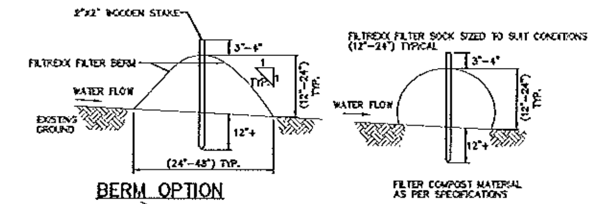

BERM OPTION

SOCK OPTION

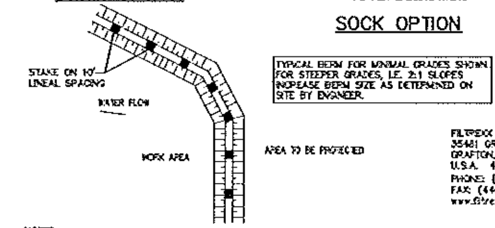

TYPICAL BERM FOR MINIMAL GRADES SHOWN. FOR STEEPER GRADES, I.E. 2:1 SLOPES INCREASE BERM SIZE AS DETERMINED ON SITE BY ENGINEER.

FILTREXX INTERNATIONAL
35481 GRAFTON EASTERN RD.
GRAFTON, OH
U.S.A. 44044
PHONE: (440) 926-8041
FAX: (440) 926-4021
www.filtrexx.com

NOTES:
1. INSTALLATION TO BE COMPLETED IN ACCORDANCE WITH MANUFACTURER'S SPECIFICATIONS.
2. DO NOT SCALE DRAWINGS.
3. ALL MATERIAL TO MEET FILTREXX SPECIFICATIONS.
4. THE CONTRACTOR SHALL MAINTAIN THE COMPOST FILTER BERM IN A FUNCTIONAL CONDITION AT ALL TIMES AND IT SHALL BE ROUTINELY INSPECTED.
5. WHERE THE BERM REQUIRES REPAIR, IT WILL BE ROUTINELY REPAIRED.
6. THE CONTRACTOR SHALL REMOVE SEDIMENTS COLLECTED AT THE BASE OF THE BERM WHEN THEY REACH 1/3 OF THE EXPOSED HEIGHT OF THE BERM, OR AS DIRECTED BY THE ENGINEER.
7. THE COMPOST FILTER BERM WILL BE DISPERSED ON SITE WHEN NO LONGER REQUIRED, AS DETERMINED BY THE ENGINEER.
8. CONTRACTORS NOTE: FOR PRODUCT AND PURCHASING INFORMATION VISIT www.PROJECTmarketsite.com REFERENCE NUMBER 466-005

FILTREXX® FILTERSOCKS™ /FILTER BERMS

NOT TO SCALE
ES/ES035

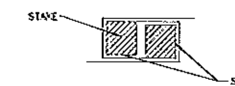

JOINING FENCE SECTIONS

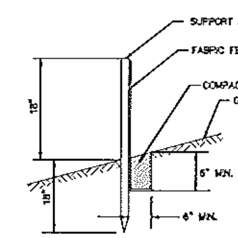

WHERE ENDS OF FILTER FABRIC COME TOGETHER, THEY MUST BE OVERLAPPED, FOLDED AND STAPLED TO PREVENT SEDIMENT BYPASS. THE TOE ANCHOR MUST BE BACKFILLED AND COMPACTED TO A DENSITY EQUAL TO THE SURROUNDING SOILS.

* STAKES SPACED @ 8' MAXIMUM. USE 2" X 2" WOOD OR EQUIVALENT STEEL STAKES.

FILTER FABRIC FENCE MUST BE PLACED AT LEVEL EXISTING GRADE. BOTH ENDS OF THE BARRIER MUST BE EXTENDED AT LEAST 8 FEET UP SLOPE AT 45 DEGREES TO THE MAIN BARRIER ALIGNMENT.

SEDIMENT MUST BE REMOVED WHEN ACCUMULATIONS REACH 1/2 THE ABOVE GROUND HEIGHT OF THE FENCE.

ANY SECTION OF FILTER FABRIC FENCE WHICH HAS BEEN UNDERMINED OR TOPPED MUST BE IMMEDIATELY REPLACED WITH A ROCK FILTER OUTLET. SEE DETAIL "ROCK FILTER OUTLETS".

STANDARD FILTER FABRIC FENCE (18" HIGH)

NOT TO SCALE

CONSTRUCTION NOTES:

1. FILTER BAGS MAY BE USED TO FILTER WATER PUMPED FROM DISTURBED AREAS PRIOR TO DISCHARGING TO WATERS OF THE COMMONWEALTH. THEY MAY ALSO BE USED TO FILTER WATER PUMPED FROM THE SEDIMENT STORAGE AREAS OF SEDIMENT BASINS.
2. THE PUMPING RATE SHOULD BE DETERMINED BY THE CONTRACTOR BASED UPON ACTUAL AMOUNT OF GROUNDWATER ENCOUNTERED DURING CONSTRUCTION. PUMPING RATES WILL VARY DEPENDING ON THE SIZE OF THE FILTER BAG, AND THE TYPE AND AMOUNT OF SEDIMENT DISCHARGED TO THE BAG.
3. FILTER BAGS SHALL BE MADE FROM NON-WOVEN GEOTEXTILE MATERIAL SEWN WITH HIGH STRENGTH, DOUBLE STICHTED "J" TYPE SEAMS. THEY SHALL BE CAPABLE OF TRAPPING PARTICLES LARGER THAN 150 MICRONS.
4. A SUITABLE MEANS OF ACCESSING THE BAG WITH MACHINERY REQUIRED FOR DISPOSAL PURPOSES MUST BE PROVIDED. FILTER BAGS SHALL BE REPLACED WHEN THEY BECOME 1/2 FULL. SPARE BAGS SHALL BE KEPT AVAILABLE FOR REPLACEMENT OF THOSE THAT HAVE FAILED OR ARE FILLED.
5. BAGS SHALL BE LOCATED IN WELL-VEGETATED (GRASSY) AREA, AND DISCHARGE ONTO STABLE, EROSION RESISTANT AREAS. WHERE THIS IS NOT POSSIBLE, A GEOTEXTILE FLOW PATH SHALL BE PROVIDED. BAGS SHALL NOT BE PLACED ON SLOPES GREATER THAN 5%.
6. THE PUMP DISCHARGE HOSE SHALL BE INSERTED INTO THE BAGS IN THE MANNER SPECIFIED BY THE MANUFACTURER AND SECURLY CLAMPED.
7. THE PUMPING RATE SHALL BE NO GREATER THAN 750 GPM OR 1/2 THE MAXIMUM SPECIFIED BY THE MANUFACTURER, WHICHEVER IS LESS. PUMP INTAKES SHOULD BE FLOATING AND SCREENED.

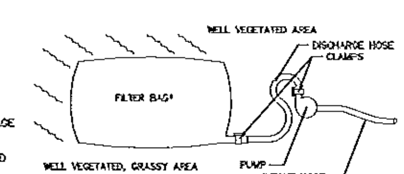

PLAN VIEW

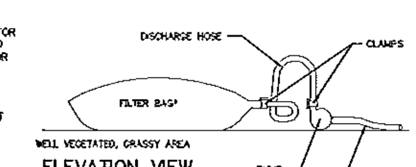

ELEVATION VIEW

PUMPED WATER FILTER BAG

NOT TO SCALE

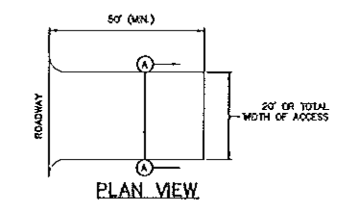

PLAN VIEW

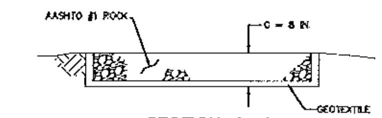

SECTION A-A

MAINTENANCE: ROCK CONSTRUCTION ENTRANCE THICKNESS SHALL BE CONSTANTLY MAINTAINED TO THE SPECIFIED DIMENSIONS BY ADDING ROCK. A STOCKPILE SHALL BE MAINTAINED ON SITE FOR THIS PURPOSE. AT THE END OF EACH CONSTRUCTION DAY, ALL SEDIMENT DEPOSITED ON PAVED ROADWAYS SHALL BE REMOVED AND RETURNED TO THE CONSTRUCTION SITE.

ROCK CONSTRUCTION ENTRANCE

NOT TO SCALE

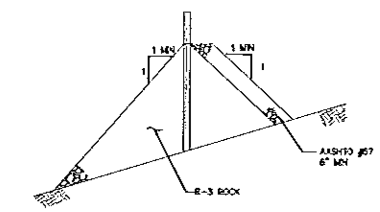

OUTLET CROSS-SECTION

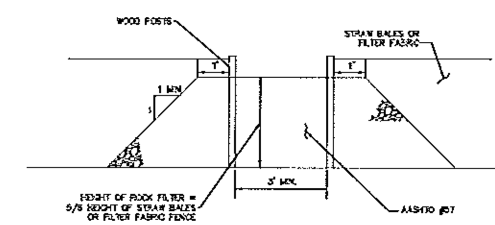

UP-SLOPE FACE

ROCK FILTER OUTLETS SHALL ONLY BE USED AS A REPLACEMENT FOR A SECTION OF SILT FENCE WHICH HAS BEEN UNDERMINED OR TOPPED. SEDIMENT MUST BE REMOVED WHEN ACCUMULATIONS REACH 1/3 THE HEIGHT OF THE OUTLET. STONE SHALL BE REMOVED AND REPLACED WHEN CLOGGED WITH SEDIMENT.

ROCK FILTER OUTLETS

NOT TO SCALE

NO.	DATE	REVISION
3	9/14/12	CHANGE ORDER #1 SCOPE REDUCTION
2	6/25/12	MINOR REVISIONS FOR BIDDING
1	9/27/11	REVISED PER SCD COMMENTS DATED 9/7/11

FOR RETTEW ASSOCIATES BY:

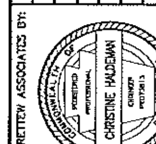

MANAGER: CHARLES MYERS, P.E.
DESIGN BY: | CHKD BY: CH
SURV. CHIEF: R. ORNER | FIELDBOOK NO. DATA COLLECTOR
DRAWN BY: | CHKD BY: CLM

XREFS:

DRAWING REFERENCE:

CLIENT
SCHUYLKILL HEADWATERS ASSOCIATION, INC.
P.O. BOX 1385
POTTSVILLE, PA 17901
PHONE: 570-385-2122

SCALE
NO SCALE

RETTEW Associates, Inc.
950 E. Main Street, Suite # 220
Schuylkill Haven, PA 17972
Phone (570) 385-2270 · Fax (570) 385-2217
Email: rettew@rettew.com Website: www.rettew.com
Engineers • Planners • Surveyors • Landscape Architects
Environmental Consultants

ABANDONED MINE DRAINAGE REMEDIATION FOR THE MARY D BOREHOLE

E&S NOTES

SCHUYLKILL TOWNSHIP SCHUYLKILL COUNTY, PA

DATE: AUG. 11, 2011

SHEET NO. 12 OF 13

DWG. NO. 08-04234-008

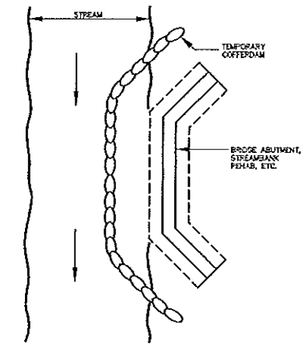

IN-STREAM COFFERDAM DIVERSION

NOT TO SCALE
ES/ES022

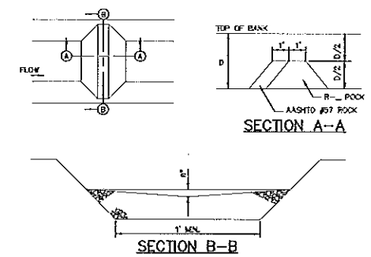

FOR $3' \leq D$ USE R-4
FOR $2' \leq D < 3'$ USE R-3
FOR $1' \leq D < 2'$ USE R-2

SEDIMENT MUST BE REMOVED WHEN ACCUMULATIONS REACH 1/2 THE HEIGHT OF THE FILTERS.

IMMEDIATELY UPON STABILIZATION OF EACH CHANNEL, REMOVE ACCUMULATED SEDIMENT, REMOVE ROCK FILTER, AND STABILIZE DISTURBED AREAS.

ROCK FILTERS

NOT TO SCALE
ES/DR043

NORTH AMERICAN GREEN

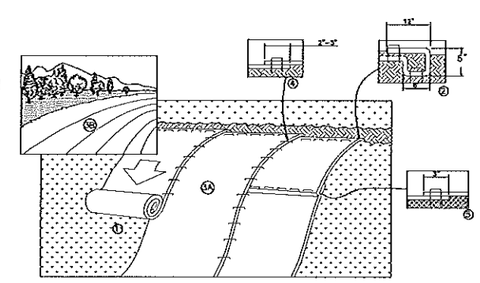

1. PREPARE SOIL BEFORE INSTALLING ROLLED EROSION CONTROL PRODUCTS (RECP's), INCLUDING ANY NECESSARY APPLICATION OF LIME, FERTILIZER, AND SEED.
NOTE: WHEN USING CELL-O-SEED DO NOT SEED PREPARED AREA. CELL-O-SEED MUST BE INSTALLED WITH PAPER SIDE DOWN.
2. BEGIN AT THE TOP OF THE SLOPE BY ANCHORING THE RECP's IN A 6" (15 CM) DEEP X 6" (15 CM) WIDE TRENCH WITH APPROXIMATELY 12" (30cm) OF RECP's EXTENDED BEYOND THE UP-SLOPE PORTION OF THE TRENCH. ANCHOR THE RECP's WITH A ROW OF STAPLES/STAKES APPROXIMATELY 12" (30 CM) APART IN THE BOTTOM OF THE TRENCH. BACKFILL AND COMPACT THE TRENCH AFTER STAPLING. APPLY SEED TO COMPACTED SOIL AND FOLD REMAINING 12" (30 CM) PORTION OF RECP's BACK OVER SEED AND COMPACTED SOIL. SECURE RECP's OVER COMPACTED SOIL WITH A ROW OF STAPLES/STAKES SPACED APPROXIMATELY 12" (30 CM) APART ACROSS THE WIDTH OF THE RECP's.
3. ROLL THE RECP's (A.) DOWN OR (B.) HORIZONTALLY ACROSS THE SLOPE. RECP's WILL UNROLL WITH APPROPRIATE SIDE AGAINST THE SOIL SURFACE. ALL RECP's MUST BE SECURELY FASTENED TO SOIL SURFACE BY PLACING STAPLES/STAKES IN APPROPRIATE LOCATIONS AS SHOWN IN THE STAPLE PATTERN GUIDE. WHEN USING THE DOT SYSTEM®, STAPLES/STAKES SHOULD BE PLACED THROUGH EACH OF THE COLORED DOTS CORRESPONDING TO THE APPROPRIATE STAPLE PATTERN.
4. THE EDGES OF PARALLEL RECP's MUST BE STAPLED WITH APPROXIMATELY 2" – 5" (5 CM – 12.5 CM) OVERLAP DEPENDING ON RECP's TYPE.
5. CONSECUTIVE RECP's SPLICED DOWN THE SLOPE MUST BE PLACED END OVER END (SHINGLE STYLE) WITH AN APPROXIMATE 3" (7.5 CM) OVERLAP. STAPLE THROUGH OVERLAPPED AREA, APPROXIMATELY 12" (30 CM) APART ACROSS ENTIRE RECP's WIDTH.

NOTE:
*IN LOOSE SOIL CONDITIONS, THE USE OF STAPLE OR STAKE LENGTHS GREATER THAN 6" (15 CM) MAY BE NECESSARY TO PROPERLY SECURE THE RECP's.

SLOPE INSTALLATION

NOT TO SCALE
ES/ES045

NO.	DATE	REVISION
3	9/14/12	CHANGE ORDER #1 SCOPE REDUCTION
2	6/25/12	MINOR REVISIONS FOR BIDDING
1	9/27/11	REVISED PER SCD COMMENTS DATED 9/7/11

FOR RETTEW ASSOCIATES BY:

CHRISTINE HAUSMAN
COMMONWEALTH OF PENNSYLVANIA
REGISTERED PROFESSIONAL
CERTIFICATE NO. 075411

XREFS:
X:\08-04234-001*.*
X:\08-04234-002*.*

MANAGER: CHARLES MYERS, P.E.
DESIGN BY: CHKD BY: CH
SURV. CHIEF: R. CORNER
FIELDBOOK NO. DATA COLLECTOR
DRAWN BY: CHKD BY: CLM
DRAWING REFERENCE:
N:\08-04234-008\CAD-GIS\Dwg\08-04234-008-ES Details.dwg

CLIENT
SCHUYLKILL HEADWATERS ASSOCIATION, INC.
P.O. BOX 1385
POTTSVILLE, PA 17901
PHONE: 570-385-2122

SCALE
NO SCALE

RETTEW
RETTEW Associates, Inc.
850 E. Main Street, Suite # 220
Schuylkill Haven, PA 17972
Phone (570) 385-2277 Fax (570) 385-2217
Email: rettew@rettew.com Website: www.rettew.com
Engineers • Planners • Surveyors • Landscape Architects
Environmental Consultants

ABANDONED MINE DRAINAGE REMEDIATION
FOR THE
MARY D BOREHOLE
E&S NOTES
SCHUYLKILL TOWNSHIP SCHUYLKILL COUNTY, PA

DATE: AUG. 11, 2011

SHEET NO. 13 OF 13

DWG. NO. 08-04234-008